Ecole Nationale des Ponts et Chaussées

2014-2015

Projet de Fin d'Etudes

Département Génie Civil et Construction

Konstantinos LYTOS

Conseiller scientifique : Eddie Jump

Directeur de projet : Gilles Forêt

Double diplôme

Design of flat slabs of Saint Cross College in Oxford

Includes research on the punching shear capacity of flat slabs

Projet réalisé au sein de Pell Frischmann

5 Manchester Square, London, W1U 3PD, United Kingdom

02/03/15 – 30/06/15

Remerciements

Je tiens à remercier M. Gilles Forêt, M. Eddie Jump et M. Alasdair Sinclair pour leur disponibilité et leur souci de l'aboutissement de mon travail. Aucun mot ne suffirait pour exprimer ma gratitude pour tout le soutien moral et technique dont ils m'ont humblement entouré.

Je remercie également M. Ashu Prabhu, M. Tom Robertshaw et Mlle Giulia Tomasello de m'avoir offert cette opportunité d'intégrer l'équipe Pell Frischmann.

Aussi, je réserve un remerciement spécial à mes collègues de bureau pour la gentillesse et la patience qu'ils ont manifestées à mon égard durant ces quatre mois.

Pour finir, je voudrais remercier ma famille pour tout le soutien moral et physique et dédier mon diplôme d'ingénieur à elle.

Résumé

Le projet de fin d'études concerne le calcul détaillé du ferraillage des dalles en béton armé du bâtiment «Saint Cross College» qui est actuellement conçu par Pell Frischmann. Les dalles sont généralement plates et directement soutenues par des poteaux. Le bâtiment est d'abord modélisé en éléments finis sur le logiciel Scia Engineer 2014. Cette analyse est ensuite utilisée pour calculer le ferraillage des dalles. Un domaine qui est traditionnellement d'une attention particulière est l'intersection entre les poteaux et une dalle plate, car la zone d'interface est généralement soumise à des contraintes élevées sur une petite section / périmètre. Cela peut conduire à une rupture par poinçonnement, qui est de nature fragile, sans avertissement et presque immédiate. Dans ce rapport, les différentes méthodes pour augmenter la capacité des dalles contre le poinçonnement sont évaluées et comparées. Enfin, une méthode innovante qui concerne l'utilisation des FRP (Fiber-reinforced polymers) collés comme matériau de renforcement est présentée.

Mots-clés : béton armé, ferraillage des dalles, poinçonnement, éléments finis, FRP collés

Abstract

The thesis concerns the detailed calculation of the slab reinforcement of the building «Saint Cross College» which is currently being designed by Pell Frischmann. The slabs are generally flat and directly supported on columns. The building is firstly modelled in the FE software Scia Engineer 2014.The output of the analysis is then used for calculating the required reinforcement of the slabs. One area that is traditionally of particular attention is the intersection between columns and a flat slab, as the interface area is usually subject to high stresses on a small section/perimeter. This can lead to a punching shear failure, which is of brittle nature, without warnings and almost immediate. In this thesis, the different methods to increase the punching shear capacity of RC flat slabs are evaluated and compared. Finally, an innovative method which concerns the use of fiber-reinforced polymers as a strengthening material is presented.

Keywords: reinforced concrete, flat slabs, punching shear, fiber-reinforced polymers, finite elements

Table of contents

Contents

Table of figures

List of tables

Presentation of Pell Frischmann

Pell Frischmann dates back to 1926 when the late Cecil Pell founded C J Pell and Partners. At the time the company concentrated mainly on building structures. Since the 1970's the company has grown and diversified considerably and is now the largest privately owned civil engineering consultancy in the United Kingdom, with 7 UK and many overseas offices. The main office is situated in London and specialises in the sector of Building Structures.

Pell Frischmann specialises in the following sectors: Airports, Bridges, Building Services, Building Structures, Environment and Process Technology, Fire Engineering, Highways, Land Development and Regeneration, Power, Solid Waste, Sustainability, Traffic and Transportation, Water and Wastewater. The company is well-known for numerous challenging and complex projects such as the Kingsgate House in London, the New Street Square in London and the Forth Rail Bridge in Edinburgh. Pell Frischmann is recognised by the professional bodies and Institutions for its excellence through innovation. The company's projects and staff have been commended for achievements in a variety of sectors and have received a number of awards over the last few years.

Figure 1, Forth Rail Bridge in Edinburgh

1. Introduction

1.1. Flat slabs

Reinforced concrete slabs are used in many types of structures. They can be divided into slabs that transmit their loads on columns via beams and slabs that are directly supported on columns without the use of any beam (flat slabs). In order to facilitate the transfer of forces from the flat slab to the column and decrease the local stresses applied to the slab, column heads or drop panels can also be used. However, the slabs can have the form of flat plates and be directly supported on the columns without the use of any other mean.

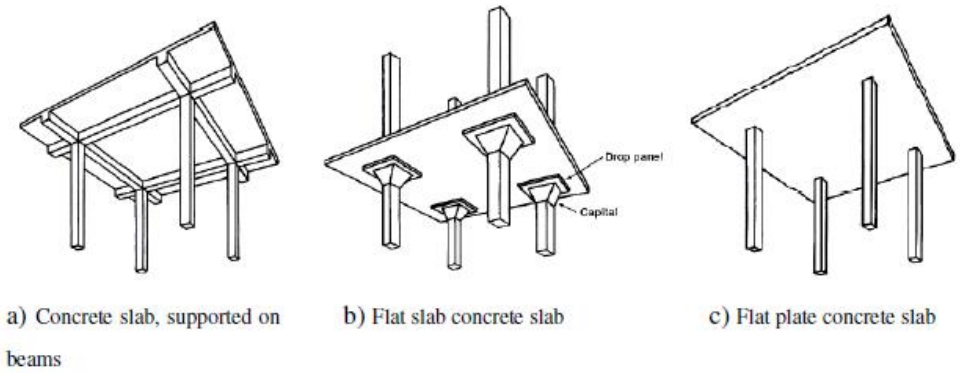

Figure 2, Different types of slabs and supports

Figure 3, Flat plate concrete slab

Because of their simplicity, flat plates are widely used in parking garages, offices as well as apartment buildings. This strategy optimises the height and the interior space of the building, as the extra thicknesses of the beams, column heads or drop panels are excluded. In addition, flat plates require simple formwork and reduce the construction time needed. These economic and architectural advantages make flat plates a very desirable structural system.

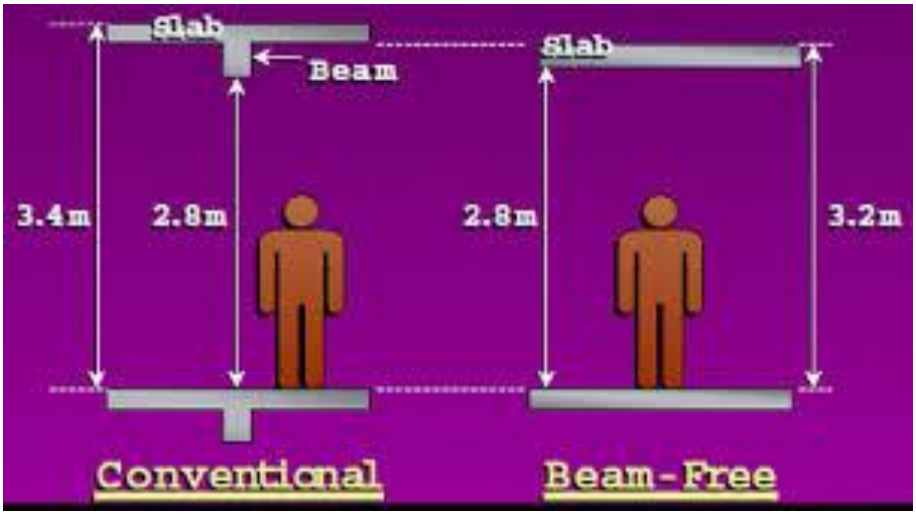

Figure 4, Optimisation of the height of the building using flat slabs

Supporting a slab directly on a column can lead to a punching shear failure, as the slab may not be able to support locally the axial force of the column. The punching shear failure is

of brittle nature, without warnings and almost immediate. In this case, an accurate analysis of the loads acting on the intersections between columns and the slab must be made. The punching shear is characterised by a truncated cone or pyramid failure.

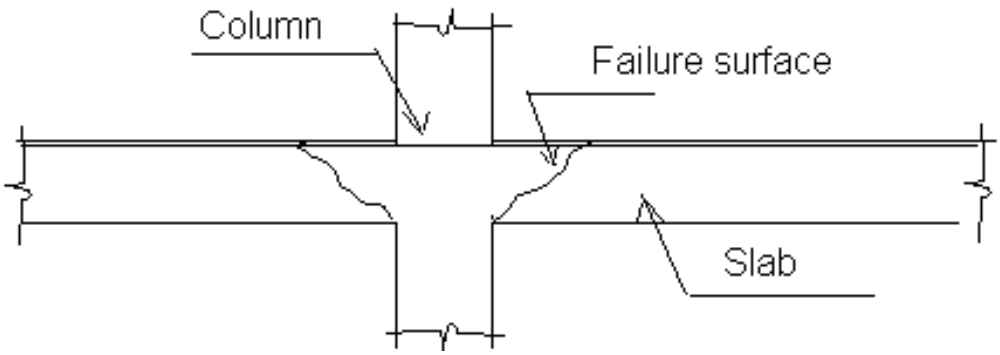

Figure 5, Punching shear failure surface

One of the most notorious structural failures due to punching shear is the collapse of Sampoong department store in South Korea in 1995 in the space of 20 seconds. More than 502 people were killed and nearly 1000 were injured.

Figure 6, Collapse of Sampoong Department Store due to punching shear failure

The design of flat slabs is mostly limited by the ultimate capacity of punching shear and by serviceability conditions (large deflections in service). These criteria lead to the selection of the slab thickness and the concrete quality (Alkarani and Ravindra. R , 2013).

1.2. Outline of thesis

The thesis concerns the detailed calculation of the flat slab reinforcement of the building «Saint Cross College» which is currently being designed by Pell Frischmann. It also includes research on the punching shear capacity of flat slabs.

Chapter 2 contains the literature review for the punching shear phenomenon. The provisions of Eurocode 2 as well as some other experimental formulas are presented. An innovative and pioneering method to resist punching shear failure is also presented. This method concerns the use of FRP sheets as a strengthening tool instead of the conventional use of steel bars.

In Chapter 3 the project «Saint Cross College» is presented. In addition, the project is modelled in the Finite Element software Scia Engineer, developed by NEMETSCHEK. The output of the analysis is then used for the detailed calculation of the longitudinal reinforcement of the flat slabs of the building.

In Chapters 4 and 5, the punching shear phenomenon in the column/slab interfaces of the building is analytically investigated. The formulas and the codes presented in chapter 2 are now used for the calculation of the punching shear reinforcement in these areas. The possible arrangements of the conventional steel reinforcement are presented and compared. Furthermore, the conventional reinforcement is then compared to the innovative use of FRP sheets.

2. Literature review

2.1. Introduction

Supporting a slab directly on a column can lead to a punching shear failure, as the slab may not be able to support locally the axial force of the column. This chapter describes the parameters which influence the punching shear capacity of a concrete slab under a concentrated loading, as occurred from experimental studies and proposed mechanical models. Firstly, the punching shear resistance of slabs without shear reinforcement is evaluated. In addition, the conventional types of shear reinforcement (shear studs, bent-up bars, stirrups etc.) that are widely used in flat slabs are assessed. The provisions of the current European code (Eurocode 2 2004) are also presented.

Furthermore, some innovative materials that can be used as punching shear reinforcement, the behaviour of which is not fully understood until today, are the Fiber Reinforced Polymers (FRP) matrixes. Corrosion of steel reinforcement is an important durability problem, which leads to costly repairs and structural deterioration. The use of fiber reinforced polymers is a very promising technology which can help to overcome the problem of corrosion (El-Ghandour, A.W, Pilakoutas, K., Waldron, P. , 2003). In addition, the use of glued matrixes has the advantage of quickly repairing existing structures that need to be strengthened. In this chapter, some proposed formulas which take into account the effect of FRP matrixes to the punching shear capacity of flat slabs are presented (AFGC – Association Française de Genie Civil – Réparation et renforcement des structures en béton au moyen des matériaux composites, Septembre 2010). It should be noted that none of European recognised design standards provides specifications for the punching shear capacity of RC slabs reinforced with FRP sheets.

2.2. Punching Shear Failure

2.2.1. Punching Shear in General

The dead and live loads of a slab supported directly on a column induce high shear stresses in the slab/ column interface. These stresses can result in the column 'punching' through the slab (Alkarani and Ravindra. R, 2013). The punching shear is characterised by a truncated cone or pyramid failure as presented in figure 5. The punching shear failure occurs similarly in foundations.

Piper's Row Car Park, Wolverhampton, UK, 1997 (built in 1965).

Figure 7, Example of punching shear failure

A slab of a specific thickness and quality of concrete, which is supported by a column of known dimensions, has a maximum resistance in punching shear. Generally, the resistance of a slab in punching shear can be increased by:

- Expanding the interface which transfers shear stresses from slab to column. This can be achieved by locally increasing the thickness of the slab in the vicinity of column with drop panels or column capitals. Also, the dimensions of the column or the overall thickness of the slab can be increased.

- Using concrete of high quality

- Using punching shear reinforcement such as bent-up bars, rail, studs, stirrups or FRP matrixes in the area adjacent to the column.

The punching shear failure is a brittle failure with no warnings. For this reason, it is generally desirable to ensure that the flexural failure will occur prior to any shear failure. The criteria for deciding the best strengthening method for punching shear failure are structural and economical. The issue of ductility, which is a very desirable structural behaviour, is also important.

2.2.2. Conventional types of punching shear reinforcement

Different types of shear reinforcement have been proposed by civil engineers in order to increase the strength and ductility of concrete slabs. The role of shear reinforcement is primarily to stop the opening of the critical shear crack, increase the compression zone and aggregate interlock which leads to the increase of punching shear strength. Shear reinforcement can be classified as follow (M.A. Polak, E. El-Salakawy, and N.L. Hammill, 2005):

- Stirrups, single or double leg bar, bent-up bars, and closed ties as shown in figure 8

- Shearheads as shown in figure 9

- Stud rails, shear studs and shear bolts as shown in figure 10

- Other new and modern shear reinforcement

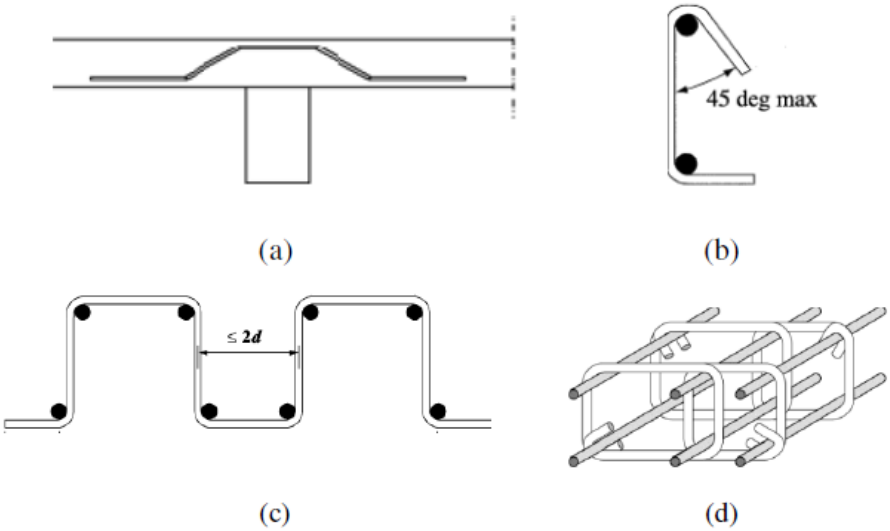

Figure 8, (a) Bent-up bar, (b) Single –leg stirrup, (c) Multiple-leg stirrup, (d) Closed-stirrup or closed tie

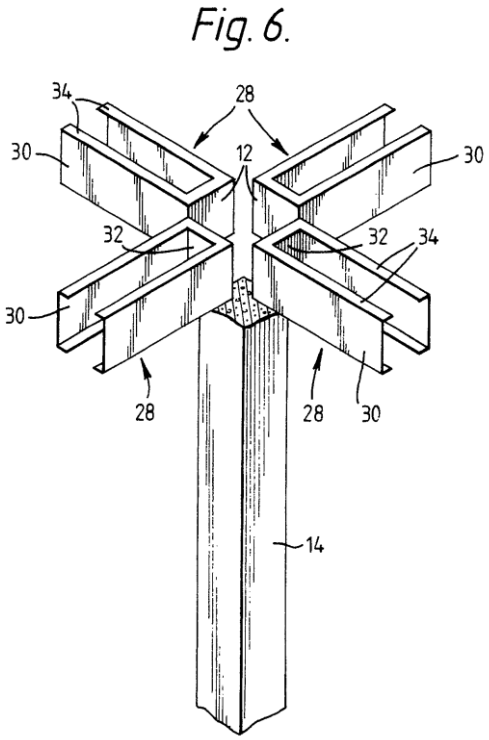

Figure 9, Typical shearhead reinforcement

Figure 10, Headed shear studs (Source: Shearail by FRANK manual)

Each type of reinforcement has its own advantages and disadvantages which are related to economy, practicality or structural efficiency. It should be noted that most of the tests on slabs strengthened with headed shear studs show a ductile and satisfactory strengthening performance (M.A. Polak, E. El-Salakawy, and N.L. Hammill, 2005). As it is also a very convenient and practical type of reinforcement, it has been recognised by many standards as an effective way to provide punching shear reinforcement for slabs.

2.3. Analytical punching shear failure model in Eurocode 2

2.3.1. Punching shear verification model

According to Eurocode 2, punching shear can result from a concentrated load or reaction acting on a relatively small area, called the loaded area Aload of a slab or a foundation. The proposed verification model for checking punching shear failure is shown in the figure below.

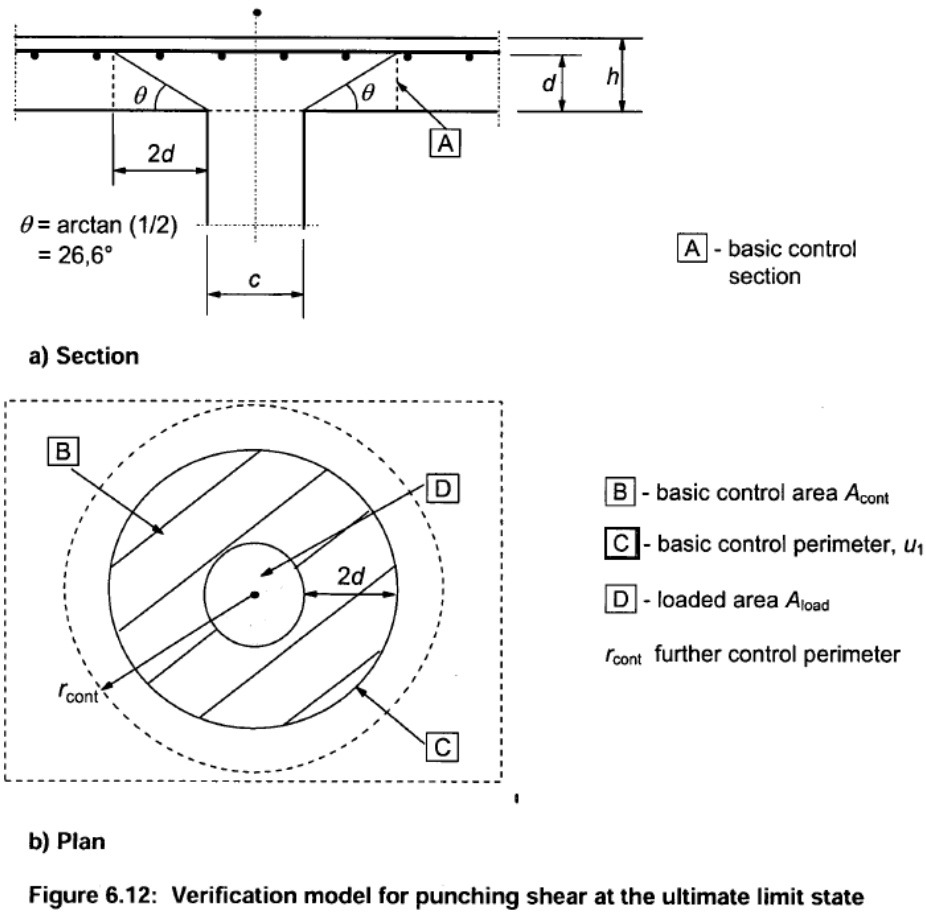

Figure 11, Verification model for punching shear at the ultimate limit state according to Eurocode 2

The shear resistance should be checked at the face of the column and at the basic control perimeter u_1. If shear reinforcement is required a further perimeter $u_{out,ef}$ should be found where shear reinforcement is no longer provided. The basic control perimeter u1 should be taken to be at a distance 2d from the loaded area and should be constructed so as to minimise its length. Typical examples of the basic control perimeter are given in the figure below.

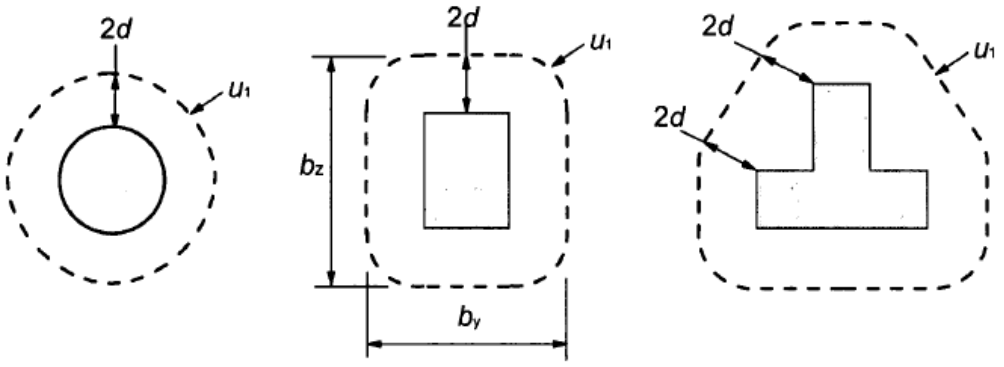

Figure 6.13: Typical basic control perimeters around loaded areas

Figure 12, Typical basic control perimeters around loaded areas according to Eurocode 2

However, for a loaded area situated near an edge or a corner, the control perimeter should be taken as shown in figure 13.

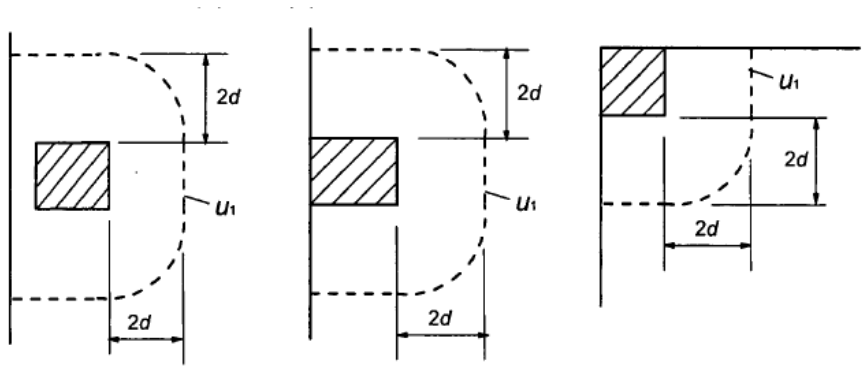

Figure 6.15: Basic control perimeters for loaded areas close to or at edge or corner

Figure 13, Basic control perimeters for loaded areas close to or at edged or corner according to Eurocode 2

In addition, for loaded areas situated near openings, if the shortest distance between the perimeter of the loaded area and the edge of the opening does not exceed 6d, that part of the control perimeter contained between two tangents drawn to the outline of the opening from the centre of the loaded area is considered to be ineffective (see figure 14).

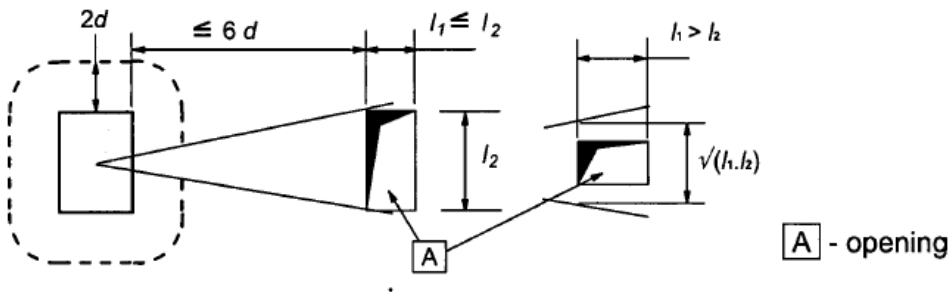

Figure 6.14: Control perimeter near an opening

Figure 14, Control perimeter near opening according to Eurocode 2

2.3.2. Punching shear calculation

2.3.2.1. General

The design procedure for punching shear is based on checks at the face of the column and at the basic control perimeter u_1. If shear reinforcement is required a further perimeter $u_{out,ef}$ (see figure 17) should be found where shear reinforcement is no longer required. The following design stressed (MPa) along the control sections are defined according to Eurocode 2.

$V_{Rd,c}$ is the design value of the punching shear resistance of a slab without punching shear reinforcement along the control section considered.

$V_{Rd,cs}$ is the design value of the punching shear resistance of a slab with punching shear reinforcement along the control section considered

$V_{Rd,max}$ is the design value of the maximum punching shear resistance along the control section considered.

The checks that must be carried out are:

1. At the column perimeter or the perimeter of the loaded area, the maximum punching shear stress should not be exceeded.

   $V_{Ed} \leq V_{Rd,max}$

2. Punching shear reinforcement is not necessary if :

   $V_{Ed} \leq V_{Rd,c}$

3. Where support reaction is eccentric with regard to the control perimeter, the maximum shear stress should be taken as :

$$V_{Ed} = \beta * \frac{V_{Ed}}{u_i * d}$$

where

d is the mean effective depth of the slab

u_i is the length of the control perimeter being considered

β is a factor for eccentricity as the unbalanced moments around the column affect the shear stresses (see figure below).

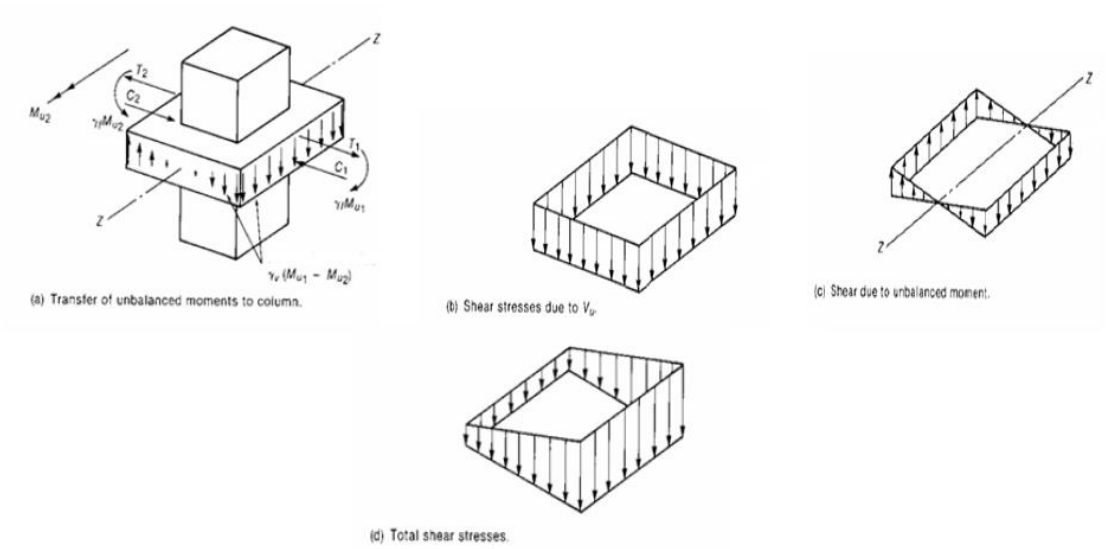

Figure 15, Combined action of shear and shear due to moment transfer at interior column , (Alkarani, Ravindra , 2013)

According to Eurocode 2, for structures where the lateral stability does not depend on frame action between the slabs and the columns and where the adjacent spans do not differ in length by more than 25% approximate values for β may be used (see figure below).

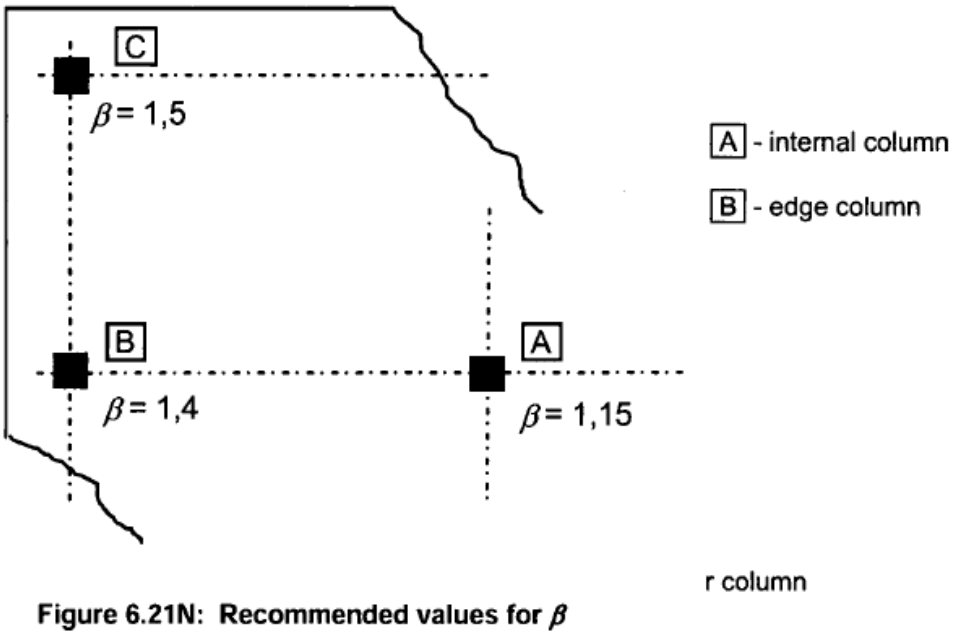

Figure 16, Recommended values for β according to Eurocode 2

2.3.2.2. Punching shear resistance of slabs and column bases without shear reinforcement

The punching shear resistance of a slab should be assessed for the basic control section. The design punching shear resistance [MPa] may be calculated as follows:

$$v_{Rd,c} = C_{Rd,c} * k * (100 * \rho_l * f_{ck})^{\frac{1}{3}} + k_1 * \sigma_{cp} \geq v_{min} + k_1 * \sigma_{cp} = 0{,}035 * k^{\frac{3}{2}} * f_{ck}^{\frac{1}{2}} + k_1 * \sigma_{cp}$$

, where

$$C_{Rd,c} = \frac{0.18}{\gamma_c} = 0{,}12$$

$k = 1 + \sqrt{\frac{200}{d}} < 2$

f_{ck} is in MPa

$\rho_l = (\rho_{ly} * \rho_{lz})^{0.5} \leq 0{,}02$

ρ_{ly} , ρ_{lz} relate to the bonded tension stein in y- and z- directions respectively. The values should be calculated as mean values taking into account a slab width equal to the column width plus 3d each side. Also,

$\sigma_{cp} = (\sigma_{cy} + \sigma_{cz})/2$

Where σcy, σcz are the normal concrete stresses in the critical section in y- and z- directions (positive if compression in MPa)

2.3.2.3. Punching shear resistance of slabs and column bases with shear reinforcement

Where shear reinforcement is required it should be calculated in accordance with the following expression:

$$v_{Rd,cs} = 0{,}75 * v_{Rd,c} + 1{,}5 * \frac{d}{s_r} * A_{sw} * f_{ywd,ef} * \frac{1}{u_1 * d} * sina$$

where

A_{sw} is the area of one perimeter of shear reinforcement around the column [mm^2]

S_r is the radial spacing of perimeter of shear reinforcement [mm]

$f_{ywd,ef}$ is the effective design strength of the punching shear reinforcement , according to

$f_{ywd,ef} = 250 + 0{,}25d \leq f_{ywd}$ [MPa]

d is the mean of the effective depths in the orthogonal directions [mm]

a is the angle between the shear reinforcement and the planed of the slab

In addition, adjacent to the column the punching shear resistance is limited to a maximum of :

$$v_{Ed,0} = \frac{\beta * V_{Ed}}{u_1 * d} \leq v_{Rd,max} = 0{,}5 * v * f_{cd}$$

where

$f_{cd} = f_{ck}/\gamma_c$

$$\nu = \left(1 - \frac{f_{ck}}{250}\right)$$

Finally, the control perimeter at which shear reinforcement is no longer required $u_{out,ef}$ should be calculated from the expression :

$$u_{out,ef,req} = \frac{\beta * V_{Ed}}{v_{Rd,c} * d_{eff}}$$

The outermost perimeter of shear reinforcement should be placed at a distance not greater than kd (where k = 1,5 according to Eurocode2) within $u_{out,ef}$. The figure below shows two possible arrangements that are proposed in Eurocode 2. These are radial arrangement and the orthogonal arrangement. It should be noted that for the orthogonal arrangement only the part of the dashed line is considered to be an effective perimeter. The length of the effective perimeter of the above calculation is equal to the length of this dashed line. Further research and comparison between these two arrangements is presented in chapter 4.

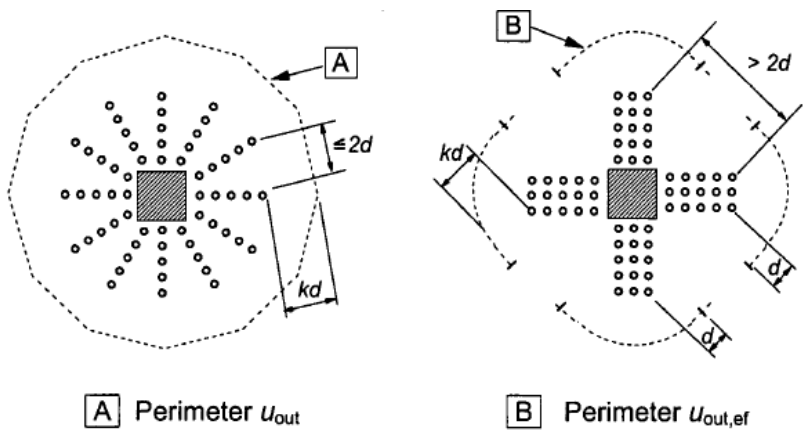

Figure 6.22: Control perimeters at internal columns

Figure 17, Possible arrangements of shear reinforcement and control perimeters

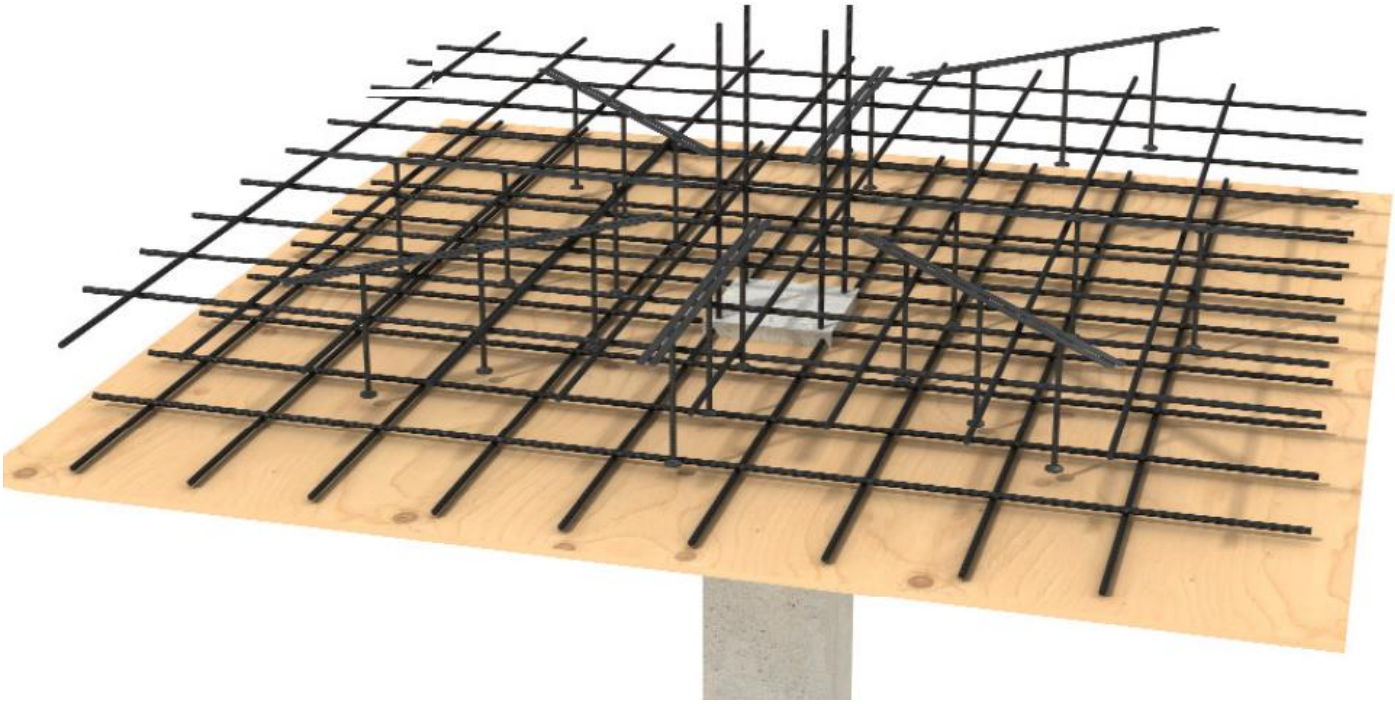

Figure 18, Illustration of orthogonal arrangement

2.3.3. Detailing requirements for punching shear reinforcement

This paragraph presents the rules imposed by Eurocode 2 concerning the spacing and the position of the shear reinforcement. In chapter 4, we use these rules in order to choose the most economical and structurally efficient arrangement.

Where punching shear reinforcement is required it should be placed between the loaded area/column and kd (where k=1,5) inside the control perimeter at which shear reinforcement is no longer required. It should be provided in at least two perimeters of link legs. The spacing of the link leg perimeters should not exceed 0,75d. In addition, the distance between the face of a support and the nearest shear reinforcement taken into account in the design should not exceed 0,5d.

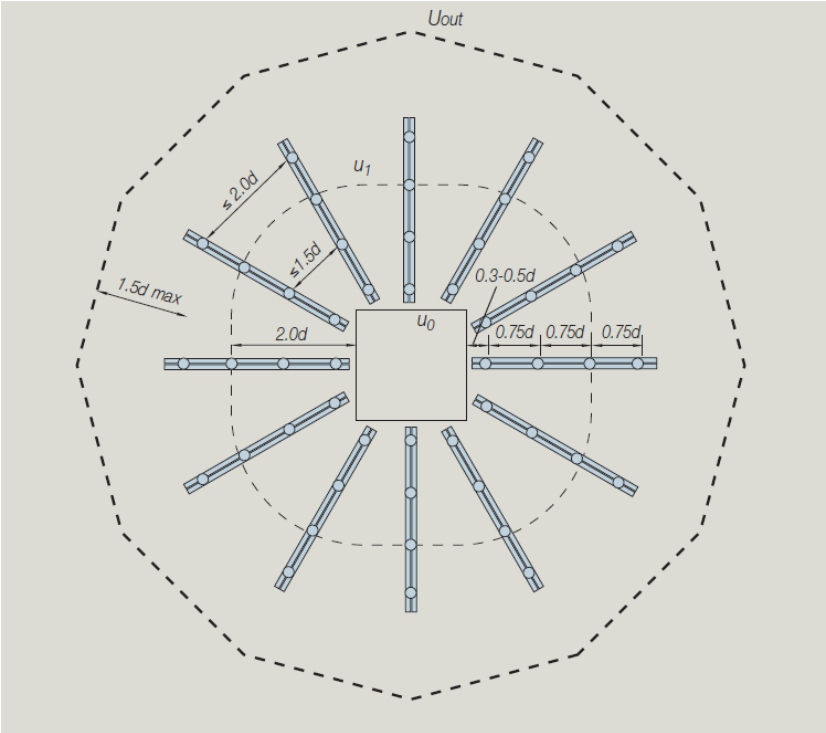

Figure 19, Plan showing the required spacing of shear reinforcement according to Eurocode 2 for radial layout

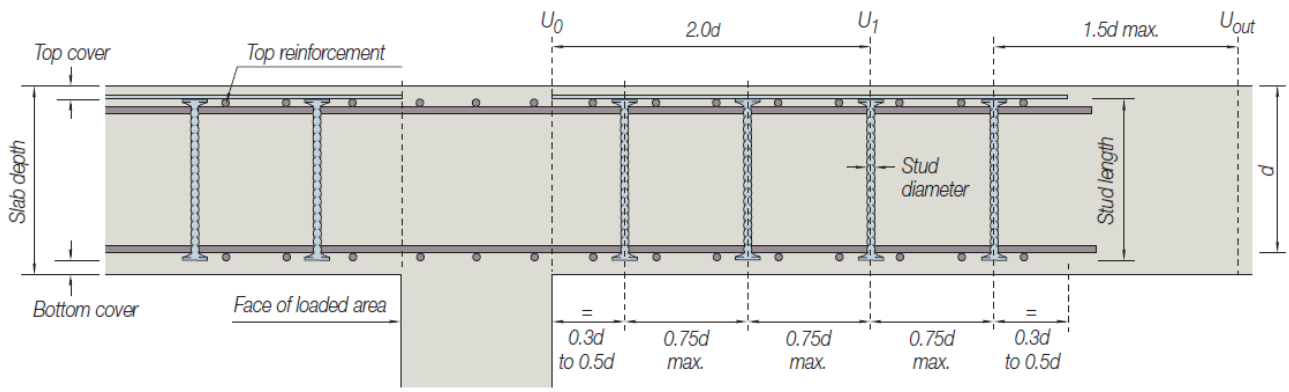

Figure 20, Section showing the required spacing of shear reinforcement according to Eurocode 2

2.4. Use of externally bonded FRP sheets

2.4.1. Introduction

As already mentioned, the classical strengthening techniques for concrete slab-column connections, in order to prevent sudden punching shear failure, include the use of shear reinforcement, the use of concrete of better quality, thickening the slab, increasing the column dimensions and using column heads. These methods do provide enough additional strength to the slab, however they are not practical, difficult to install, expensive and some of them are aesthetically not pleasing.

On the other hand, strengthening slabs with external FRP sheets is simple, does not require excessive labour, does not affect the architectural character of the building and offers the unique possibility of repairing existing structures very quickly. In addition, corrosion of steel reinforcement is a major durability problem leading to inevitable cost repairs and loss of use. The use of FRP sheets is considered to be a very promising technology for overcoming the problem of corrosion. However, the main problem of civil engineers is to evaluate the contribution of the FRP sheets to the punching shear resistance of the slab. At the moment, none of the recognised design standards provides information for the punching shear resistance of a slab reinforced with FRP sheets. Generally, the FRP bonding to the slab is achieved via a resin which is initially applied to the RC slab.

Figure 21, FRP bonding and removing excess resin by rolling

In this paragraph, we will present the analytical model that calculates the contribution of the FRP sheets to the punching shear resistance of a reinforced concrete slab. This model is based on the articles which are listed below:

[1] MENETREY PHILIPPE. Synthesis of punching failure in reinforced concrete. Cem Concr Comp 2002;24:497-507

[2] E.H. ROCHDI,D. BIGAUD, E.FERRIER, P.HAMELIN ; Ultimate behaviour of CFRP strengthened RC flat slabs under a centrally applied load. Composite Structures. 72(2006)69-78.

[3] L. MICHEL, E. FERRIER, D.BIGAUD, A. AGBOSSOU; 'Criteria for Punching Failure Mode in RC Slabs Reinforced by Externally Bonded CFRP'. Journal of Composite Structures, Elsevier ed., Volume 81, Issue 3, December 2007, Pages 438-449.

[4] AFGC – Association Francaise de Genie Civil – Réparation et renforcement des structures en béton au moyen des matériaux composites, Septembre 2010.

The French Association of Civil Engineering has published the document «Réparation et renforcement des structures en béton au moyen des matériaux composites» on Septembre 2010. This document summarises the formula for calculating the total punching shear resistance of a slab bonded externally with FRP sheets.

The calculation is based on the article of Menétrey «Synthesis of punching failure in reinforced concrete» published in 2002, who initially proposed a formula that calculates the punching shear resistance of a RC slab without FRP sheets. The formula was then extended by E.H. ROCHDI, D. BIGAUD, E.FERRIER and P.HAMELIN with the article «Ultimate behaviour of CFRP strengthened RC flat slabs under a centrally applied load» published in 2004. The formula was altered in order to calculate the beneficial effects of a solid FRP sheet bonded externally to the slab. Finally, L. MICHEL, E. FERRIER, D.BIGAUD, A. AGBOSSOU extended this approach even more by proposing a formula that calculates the punching shear resistance of a slab reinforced by crossed FRP strips, which are more economical than a solid FRP sheet. This article is called «Criteria for Punching Failure Mode in RC Slabs Reinforced by Externally Bonded CFRP» and was published in 2006.

2.4.2. Analytical model

2.4.2.1. Punching failure mechanism

The main points of the punching shear failure mechanism are (E.H. ROCHDI,D. BIGAUD, E.FERRIER, P.HAMELIN , 2004) :

- Formation of a roughly circular crack around the column periphery on the tension surface of the slab and propagation into the compression zone of concrete
- Formation of a new lateral and diagonal flexural crack
- Initiation of an inclined shear crack near middepth of the slab, observed at about half to two thirds of the ultimate load
- With increasing loads the inclined cracks develops towards the compression zone and the tension zone

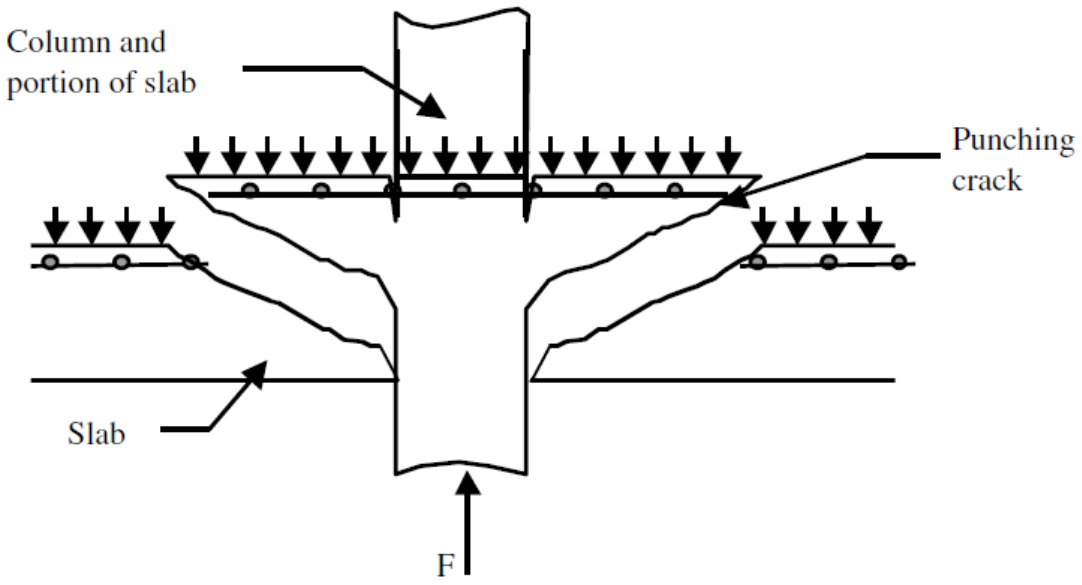

Figure 22, Punching failure mechanism

2.4.2.2. Proposed formula

The formula that calculates the punching shear resistance of a RC slab reinforced with FRP sheets is now presented. The proposed formula is based on the assumption that the equilibrium of the concrete section is assured by the contributions of the concrete, the flexural steel and the FRP sheets.

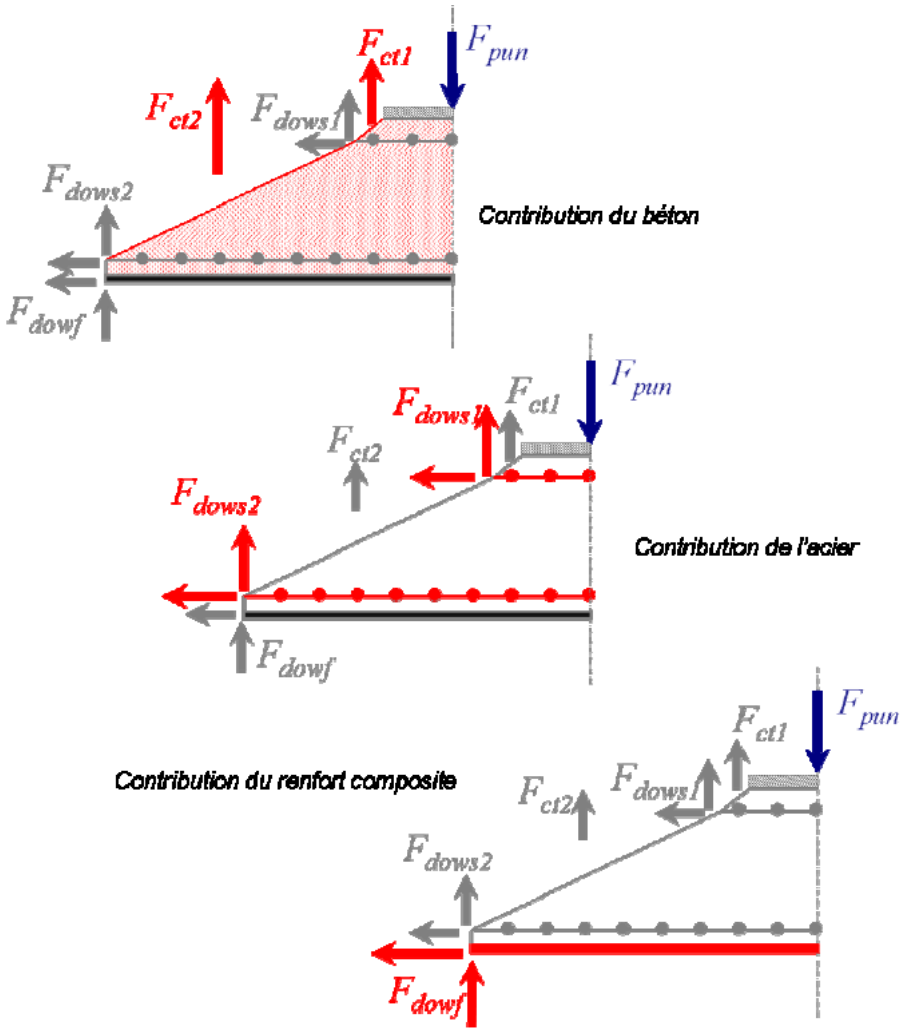

Figure. 2.7.2 : Equilibre d'une section béton armé poinçonnée (sous charge localisée)

Figure 23, Equilibrium of a RC section resisting punching shear

Thus $F_{ult} = F_{ct} + F_{dows} + F_{dowf}$, as illustrated in the above figure, where F_{ult} is the total punching shear resistance of the slab.

The resistance offered by the concrete and the longitudinal reinforcement was analytically presented in the Eurocode 2 specifications in paragraph 2.3. This paragraph emphasizes in the calculation of the additional resistance F_{dowf} provided by the FRP sheets. Once calculated, the value F_{dowf} can be added to the resistance offered by the concrete and the longitudinal reinforcement. The sum of these resistances is the total punching shear capacity of the RC slab reinforced with FRP sheets. Two cases are examined:

A. Reinforcement with solid FRP sheets

B. Reinforcement with crossed FRP strips

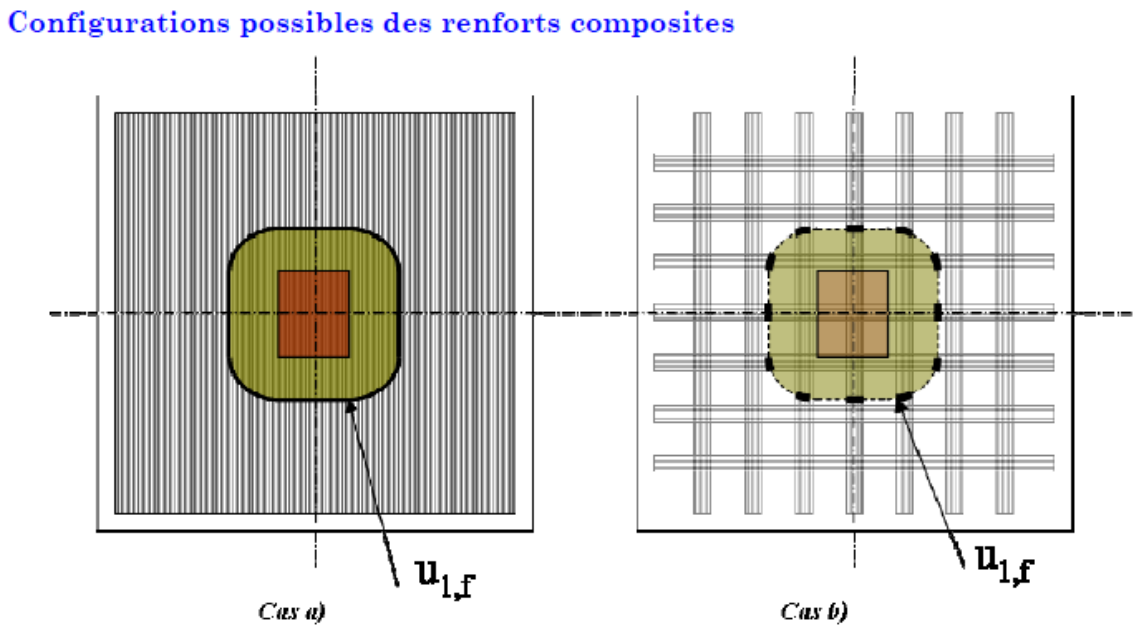

Figure 24, Possible arrangements of FRP solid sheets (a) and crossed FRP strips (b) , Source : AFGC – Association Francaise de Genie Civil, 2010

It should also be mentioned that FRP sheets are not isotropic materials. The resistances depend on the orientation of the fibres and the forces. Some typical examples of FRP resistances are shown in the figure below.

Table 2-7: Typical short-term mechanical properties of GFRP, CFRP and AFRP

Property	E-glass/epoxy	Kevlar 49/epoxy	Carbon/epoxy
Fibre volume fraction	0.55	0.60	0.65
Density (kg/m^3)	2100	1380	1600
Longitudinal modulus (GPa)	39	87	177
Transverse modulus (GPa)	8.6	5.5	10.8
In-plane shear modulus (GPa)	3.8	2.2	7.6
Major Poisson ratio	0.28	0.34	0.27
Minor Poisson ratio	0.06	0.02	0.02
Longitudinal tensile strength (MPa)	1080	1280	2860
Transverse tensile strength (MPa)	39	30	49
In-plane shear strength (MPa)	89	49	83
Ultimate longitudinal tensile strain (%)	2.8	1.5	1.6
Ultimate transverse tensile strain (%)	0.5	0.5	0.5
Longitudinal compressive strength (MPa)	620	335	1875
Transverse compressive strength (MPa)	128	158	246

Figure 25, Typical FRP resistances, Source: Fib(International Federation of Structural Concrete), September 2007

A. Reinforcement with solid FRP sheets

In this case the contribution of the FRP sheet $V_{Rd,f}$ to the total resistance of the slab can be calculated by the formula:

$$v_{Rd,f} = \frac{\psi}{\chi} * \frac{u_{1,f} * t_f * n_p}{u_1 * \gamma_f} * \left(\frac{\sigma_{f,90}}{2 * c_1} + \frac{\sigma_{f,0}}{2 * c_2}\right)$$

where

c1,c2 are the column dimensions

2d is the distance between the column and the basic control perimeter

$\sigma_{f,90}$ is the resistance of the FRP sheet in the direction of 90 degrees

$\sigma_{f,0}$ is the resistance of the FRP sheet in the direction of 0 degrees

n_p is the number of FRP sheets

t_f is the thickness of a FRP sheet

u_1 is the basic control perimeter

$u_{1,f}$ is the total width of FRP sheets thar are cut by the basic control perimeter

$v_{Rd,f}$ is the punching shear resistance provided by the FRP sheet

$\gamma_f$is a security factor equal to 1,15

ψ is a factor that depends on the thickness of the FRP sheet

Thickness (mm)	1	2	3	4	5
ψ	2,5	2,2	1,9	1,7	1,5

χ = 1 for a laminate type of reinforcement

χ = 2,5 for pultruded reinforcement

B. Reinforcement with crossed FRP strips

In this case the contribution of the crossed FRP strips $V_{Rd,f}$ to the total resistance of the slab can be calculated by the formula:

$$v_{Rd,f} = v_{Rd,fy} + v_{Rd,fz} =$$

$$= \frac{\psi}{\chi} * \frac{u_{1,fy} * w_{fy} * t_{fy} * n_{py}}{u_1^2 * \gamma_f * d_{eff}} * f_{fd} + \frac{\psi}{\chi} * \frac{u_{1,fz} * w_{fz} * t_{fz} * n_{pz}}{u_1^2 * \gamma_f * d_{eff}} * f_{fd}$$

where

d_{eff} is the effective height of the slab

$f_{fd}$is the characteristic resistance of the FRP sheet

n_{py} is the number of FRP sheets in direction y

n_{pz} is the number of FRP sheets in direction z

t_{fy} is the thickness of a FRP sheet in direction y

t_{fz} is the thickness of a FRP sheet in direction z

w_{fy} is the width of a FRP strip in direction y

w_{fz} is the width of a FRP strip in direction z

u_1 is the basic control perimeter

$u_{1,fy}$ is the total width of FRP sheets thar are cut by the basic control perimeter (direction y)

$u_{1,fz}$ is the total width of FRP sheets thar are cut by the basic control perimeter (direction z)

$v_{Rd,fy}$ is the punching shear resistance in direction y

$v_{Rd,fz}$ is the punching shear resistance in direction z

γ_f , ψ, χ are the same as in case A

Finally in both cases the FRP sheets must be properly anchored in order to obtain an effective outer perimeter $u_{out,ef}$ of concrete that can resist punching shear without the FRP sheets (like in the case of conventional steel reinforcement). The outer effective perimeter in this case is equal to:

$$u_{out,ef} = 2 * [(c_1 + c_2 + l_{anc,d}) + 2 * \pi * (d + l_{anc,d})]$$

where

$l_{anc,d}$ is the length of anchorage shown in the figure below.

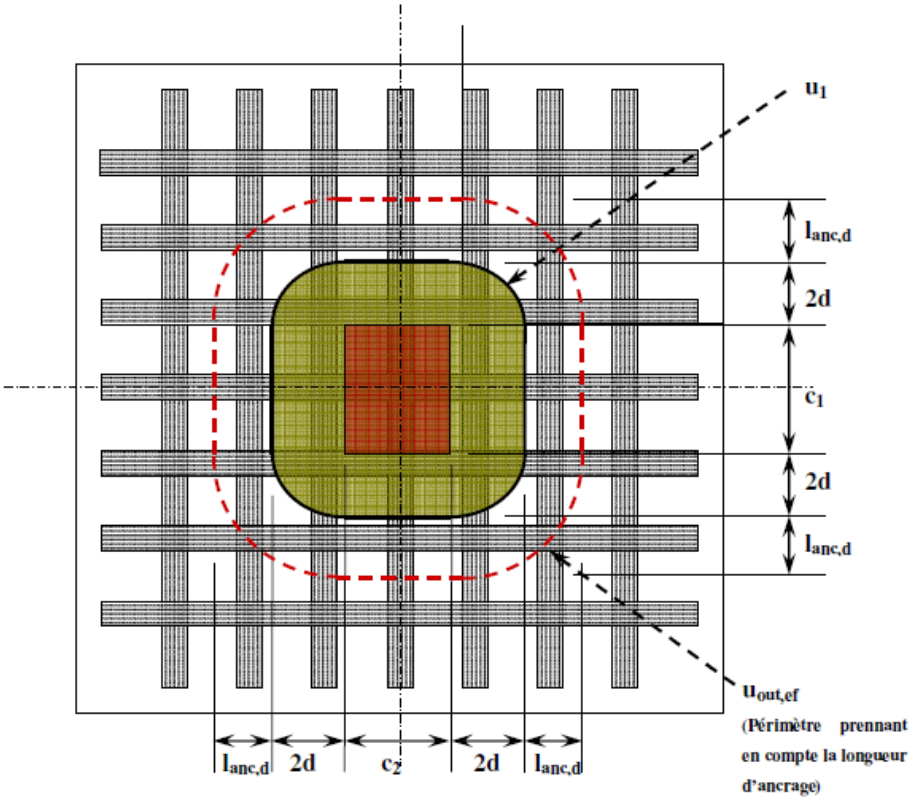

Figure 26, Outer effective perimeter and length of anchorage

This outer control perimeter should be superior to $\frac{\beta * V_{Ed}}{v_{Rd,c} * d_{eff}}$ as presented in paragraph 2.3.

An analytical example of externally bonded FRP sheets is presented in chapter 5.

2.5. Summary

In this chapter, the mechanism of punching shear failure was assessed. The provisions of Eurocode 2 for the punching shear capacity of concrete with and without steel reinforcement were analytically evaluated. Also, the conventional types of shear reinforcement were shown. Furthermore, a formula that calculates the contribution of externally bonded FRP sheets to the total punching shear capacity of a RC slab was presented. This formula was based on four published articles that were summarised by The French Association of Civil Engineering in the document «Réparation et renforcement des structures en béton au moyen des matériaux composites» published on Septembre 2010.

3. Reinforcement of concrete elements of Saint Cross College in Oxford

In the next paragraphs a building consisted of flat slabs will be studied. The name of the building is Saint Cross College. The aim of this study is to calculate the required reinforcement of the building's flat slabs. This is comprised by the longitudinal slab reinforcement and the punching shear reinforcement that is necessary in many slab/column interfaces. The different theoretical models that calculate the punching shear capacity of a slab presented in chapter 2 will be used and compared. Firstly, a Finite Element model of the building is created. Then the output of the model is used for the calculation of the longitudinal and punching shear reinforcement.

3.1. The project

St Cross College Quad Development project is a four storey RC concrete building with one storey of basement. It is situated in Oxford, UK. Ground floor consists of seminar rooms, café and library spaces, bike storage as well as a lecture theatre. First, second and third floors are used only as residential spaces and the roof level is only accessible for maintenance purposes. Finally, the basement is designed to accommodate a plant room, a storage area and a wine cellar. Vertical access to all floors is provided by two staircases and a lift. Slab openings are present at various locations to ensure adequate space for the vertical risers. In terms of façade, lightweight GRC panels will be used for aesthetical reasons.

The slabs of the building are flat and directly supported to columns or walls. Few beams exist in the building. The building has a L-shaped plan and its height is 11,80m. A plan of the building with its surroundings is demonstrated below:

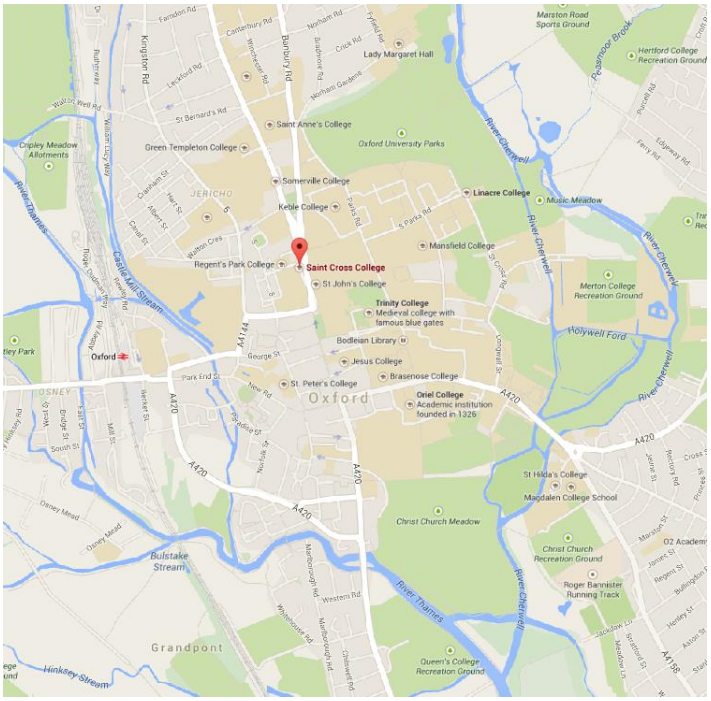

Figure 27, Saint Cross College's location in Oxford (Post code: OX1 3LZ)

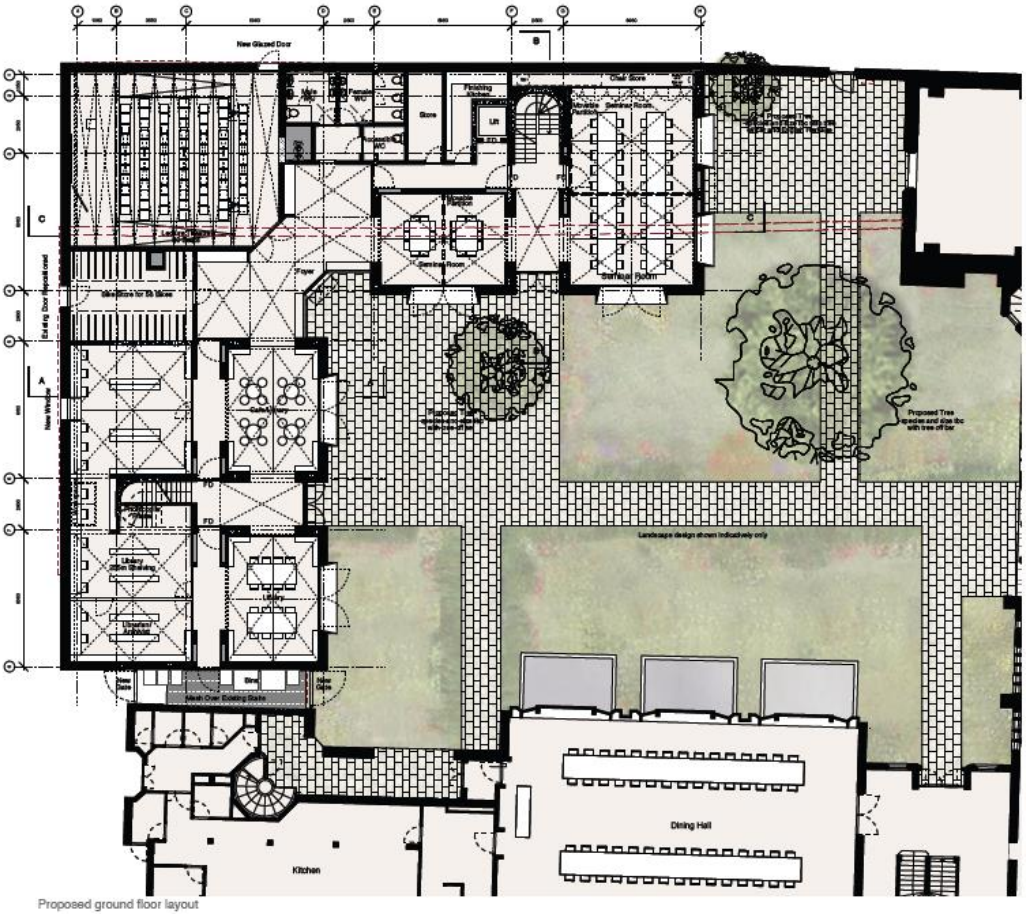

Figure 28, Ground floor layout

The detailed plans and sections of the building are presented in Appendix B.

3.2. Structural system and aim of calculations

This thesis concerns the detailed calculation of the reinforcement of the flat slabs of Saint Cross College. The building is firstly modelled at the Finite Element Software Scia Engineer, developed by NEMETSCHEK. The output of this model will provide the internal forces in the slabs. We will then calculate the required longitudinal reinforcement of the slabs of the building. These reinforcement quantities are expected to be quite high. This occurs due to two reasons.

Firstly, the slabs are directly supported to the columns without the use of any beams, which results in bigger deflections and internal forces in the slab due to live and dead loads. Secondly, in some cases the columns and the walls of the building are not aligned above and below a floor. In these locations, the slab acts like a transfer slab, which transfers the forces of the column above to the column below. In these regions, the slab is highly stressed and needs a bigger amount of reinforcement. In addition, in this case the slab/column interfaces must be thoroughly checked, as they must be able to resist a punching shear failure caused by the high axial forces of the columns and the consequent high local stresses in the slab. It must be noted that the slabs of the building are generally thin (thickness from 225mm to 350mm).

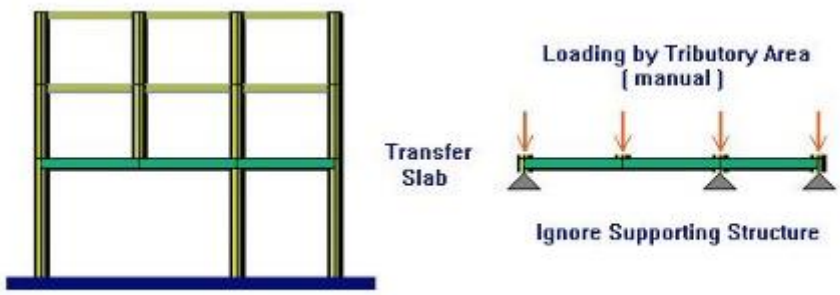

Figure 29, Typical transfer slab

In chapter 3.3., the FE model in Scia Engineer is presented. Then the output of the software is used for the calculation of the longitudinal slab reinforcement. In chapter 4, the punching shear resistance of some critical column/slab interfaces is assessed. The various possible arrangements of the punching shear reinforcement are compared and evaluated in terms of structural efficiency, practicality and economy. Furthermore, an innovative method of punching shear reinforcement is presented in chapter 5. It concerns the use of FRP sheets as a strengthening method. This solution is finally compared to the conventional ways of providing punching shear reinforcement.

3.3. Scia model

Saint Cross College is modelled in the software Scia Engineer, which is developed by NEMETSCHEK. Scia Engineer is widely used for the static analysis of structures via the finite element method. In addition, the software is capable of providing directly the required reinforcement of the different elements of the structure according to Eurocode 2. The figures below show Saint Cross College as modelled in Scia Engineer:

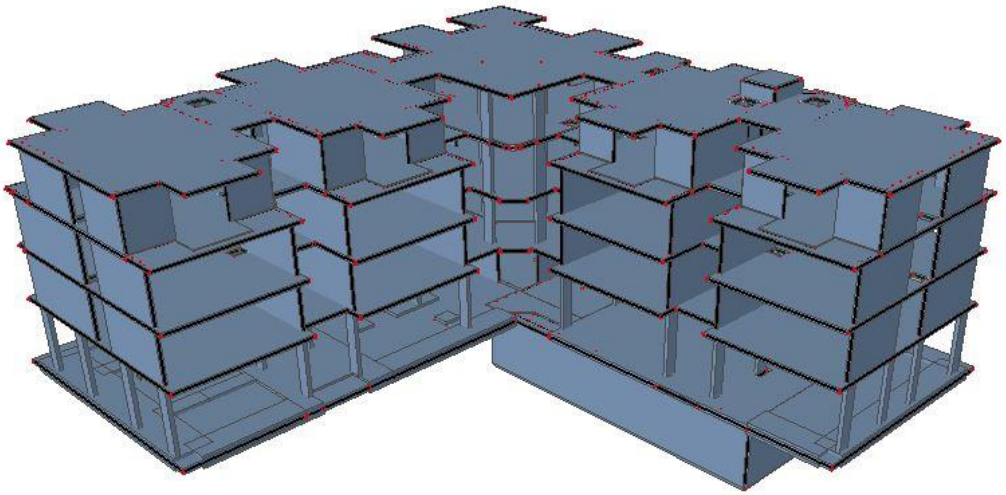

Figure 30, Saint Cross College as modelled in Scia Engineer View 1

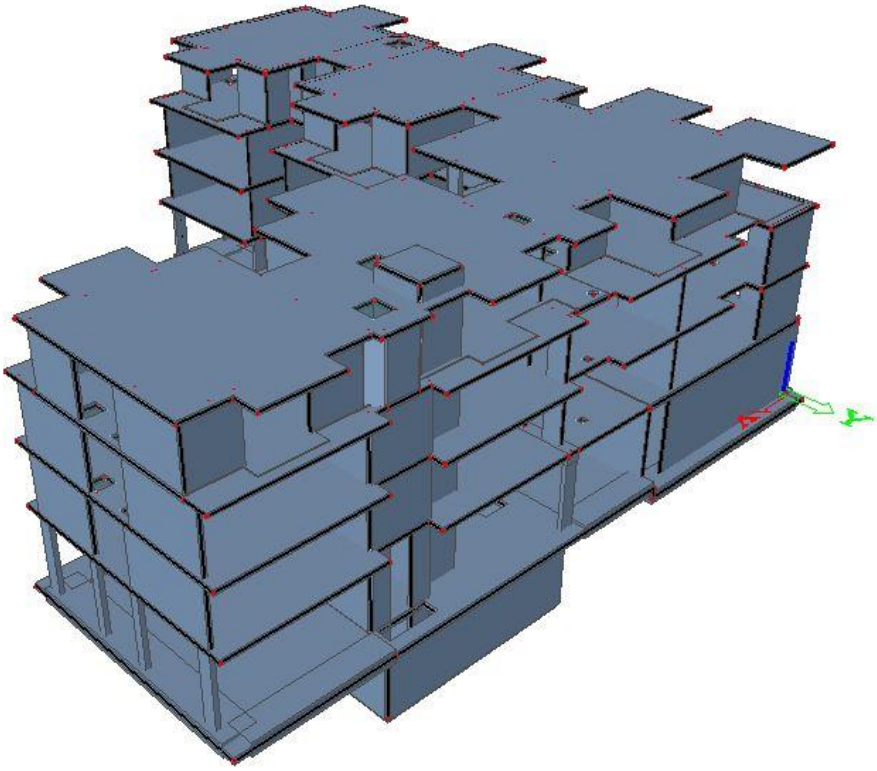

Figure 31, Saint Cross College as modelled in Scia Engineer View 2

3.3.1. Elements and Mesh

Two types of elements are used for the modelling of the building:

A. 1D elements for the modelling of columns and beams
B. 2D elements for the modelling of walls and slabs

For the creation of a 1D element the section of the element must be defined. We then input the beginning and the ending points of the element. Furthermore, for the creation of 2D elements a corresponding area with its thickness must be defined. The global mesh is obtained automatically, but there is the option to refine it locally when necessary.

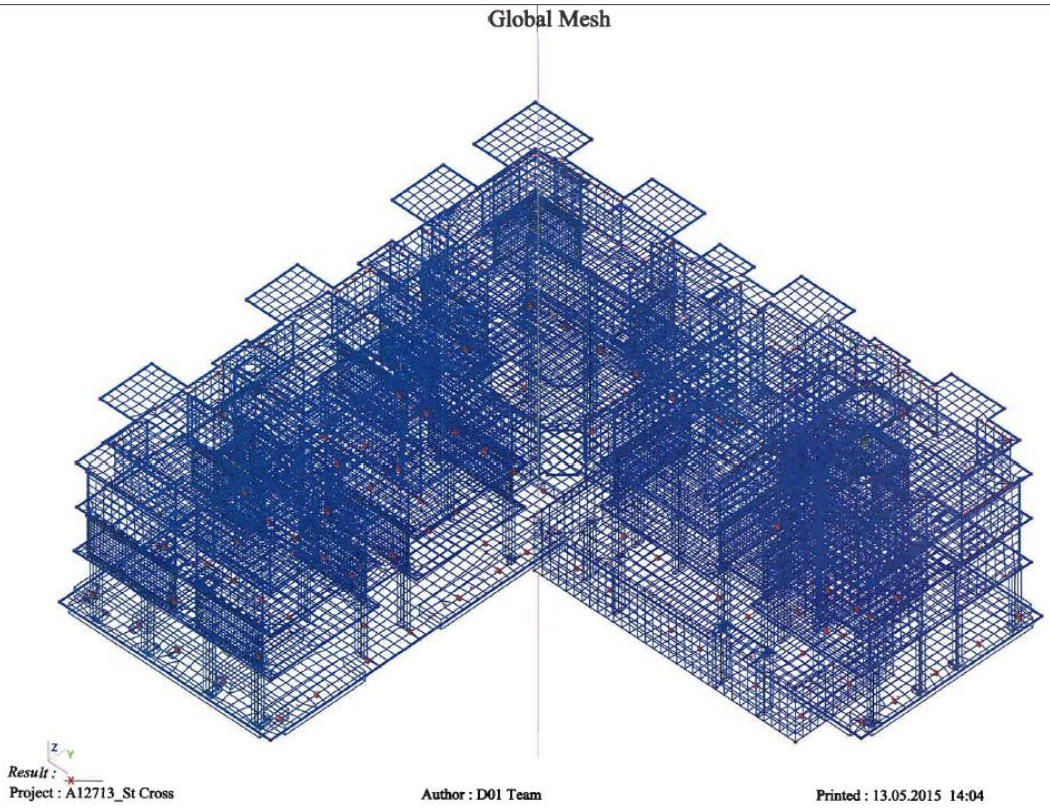

Figure 32, Global mesh of the model

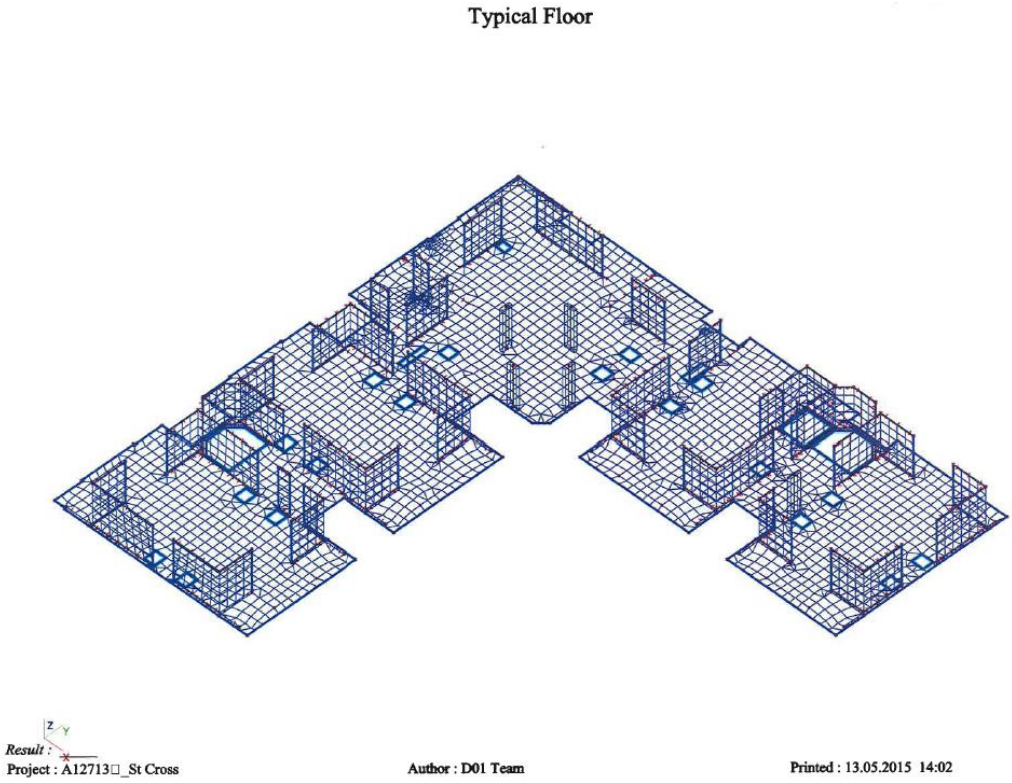

Figure 33, Mesh of typical floor of the model

3.3.2. Restraints and Supports

The building is supported to the ground via piles, which are represented in the model as springs. In the position of each pile, we input 1 vertical, 2 horizontal and 3 rotational springs, which are provided by the geotechnical department after a number of iterations between the structural and the geotechnical model.

3.3.3. Loads on the building

The unfactored dead and live loads of the building are summarised in the table below:

Dead Loads	γ (kN/m³)	G (kN/m²)
Slab	24	-
Screed	-	1.2
Partition walls	-	1.2
Façade	18	1.8
Finishes/Ceilings/Se	-	0.6
Staircase	24	3.6
Raised floor	-	1
Paving	-	1.2
Upstands	24	4.8

Live Loads	Q (kN/m²)
Circulation	3
Residential	2
Stairs	3
Balconies	3.25
Roof Maintenance	0.5
Congregation	3.5
Plant Room	7.5
Cellar	7.5

Figure 34, Dead and Live Loads

Generally, for the Ultimate Limit State (ULS) of the building the Dead Loads (G) are multiplied by a factor equal to 1,35 and the Live Loads (Q) are multiplied by a factor equal to 1,5. Also, some factors ψ_i are occasionally used for the combination of the live loads according to Eurocode 2. The building is of category: E (stockage) at the basement, C (congregation) at the ground floor and A(residential) at the first, second and third floors.

3.4. Reinforcement of slabs

In this paragraph, we will present analytically the output and the solution of the first floor slab. The second and third floors are resolved similarly.

The plan of the first floor slab is shown in the figure below:

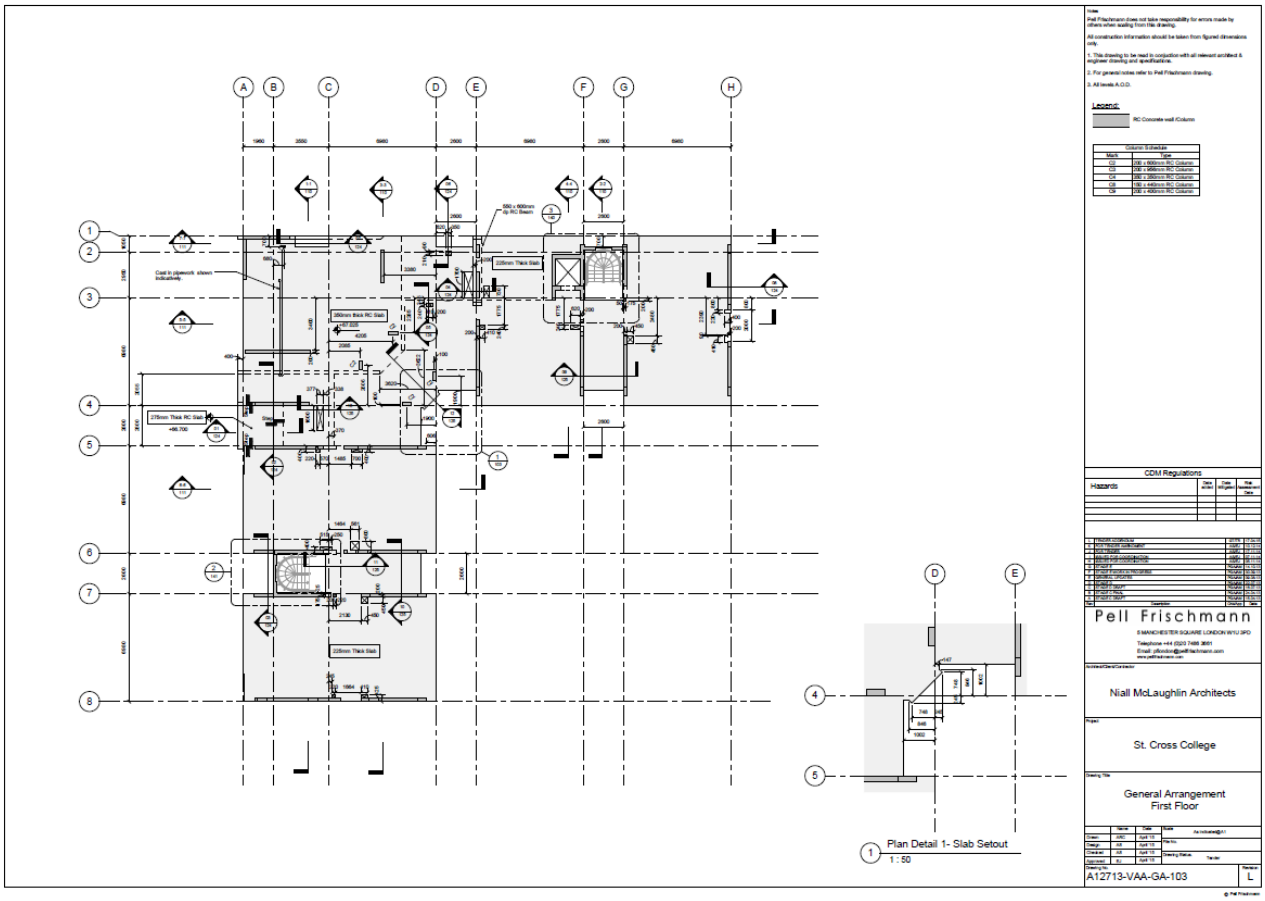

Figure 35, General arrangement first floor, Saint Cross College

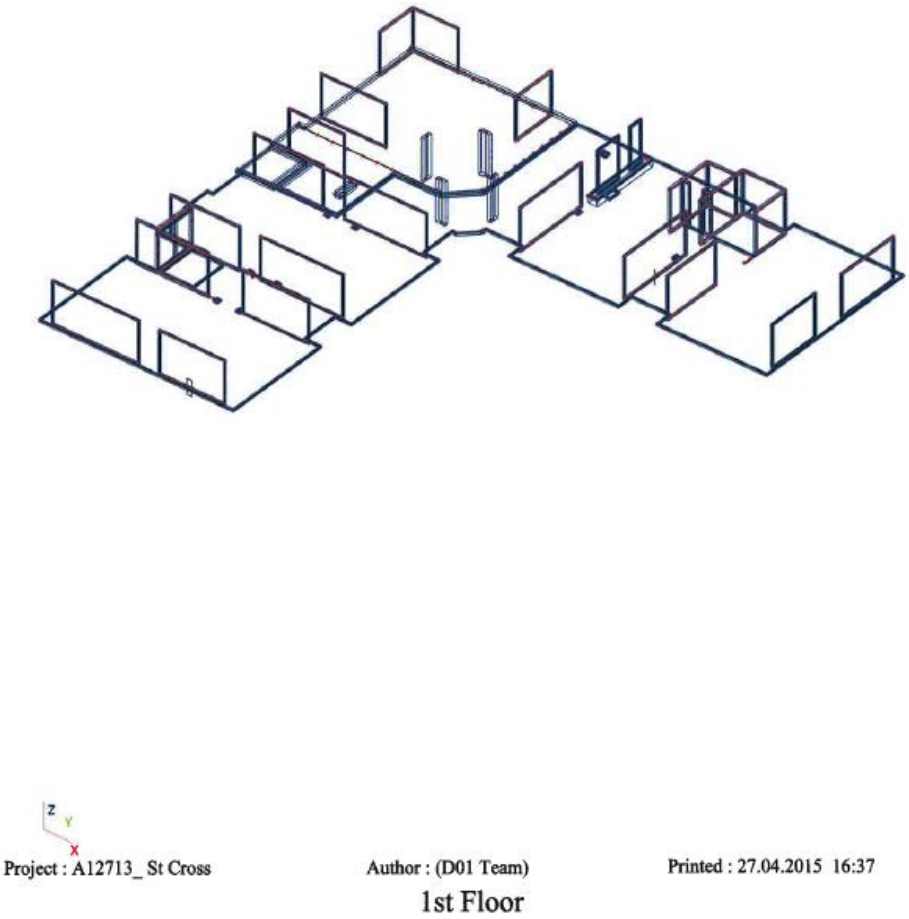

Figure 36, First floor slab, columns and walls as modelled in Scia Engineer

3.4.1. Finite Element output

The output of the model (maximum moments Mx and My) in the first floor slab for the ULS loading is presented below:

Figure 37, Moment Mx in the first floor slab, Ultimate Limit State (ULS)

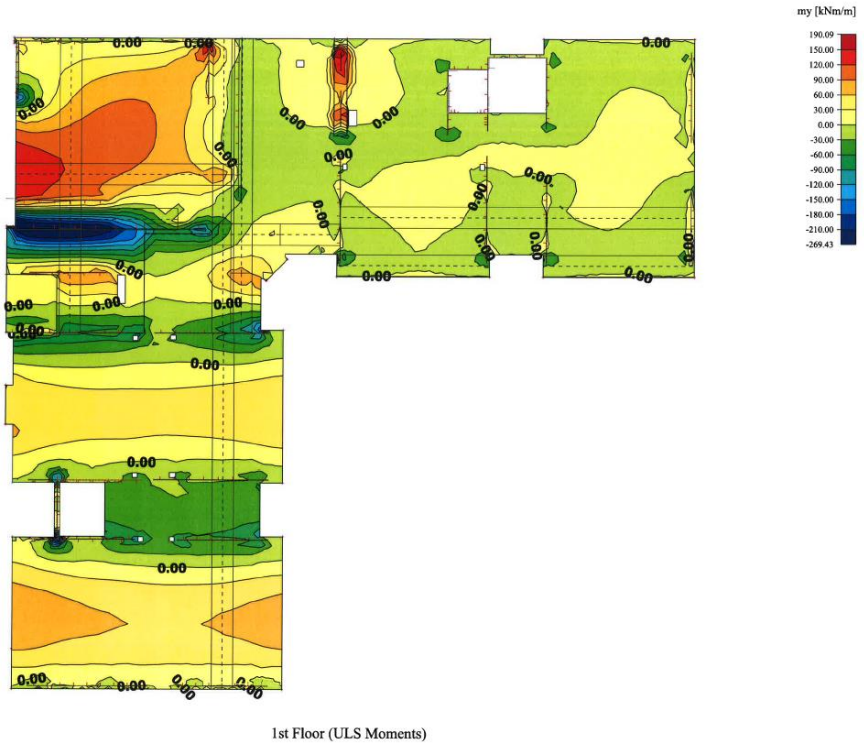

Figure 38, Moment My in the first floor slab, Ultimate Limit State (ULS)

Also, the output of the deflection for a SLS (Serviceability Limit State) loading is:

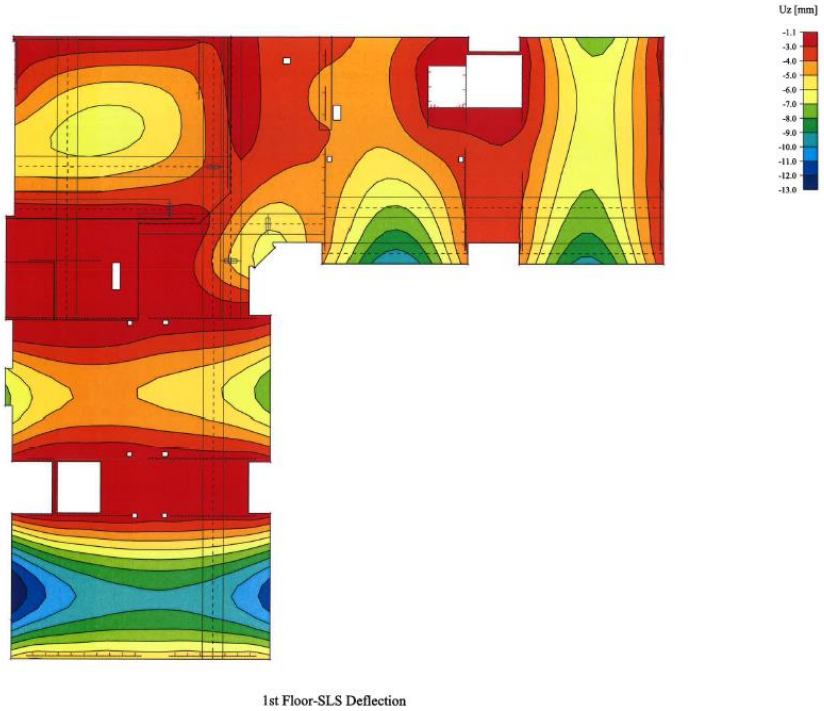

Figure 39, Deflection of the first floor slab, Serviceability Limit State (SLS)

As many of the columns and the walls are not aligned above and below the first floor slab, we observe big positive or negative moments in local areas around the columns. These columns can be supporting (negative moments) or be supported (positive moments) by the slab. In the locations where columns are not aligned, the slab acts like a transfer slab, which transfers the forces of the column above to the column below. The plan below shows both the columns/walls that are supporting the slab below the first floor and the columns /walls that are supported by the first floor slab and do not continue until the ground.

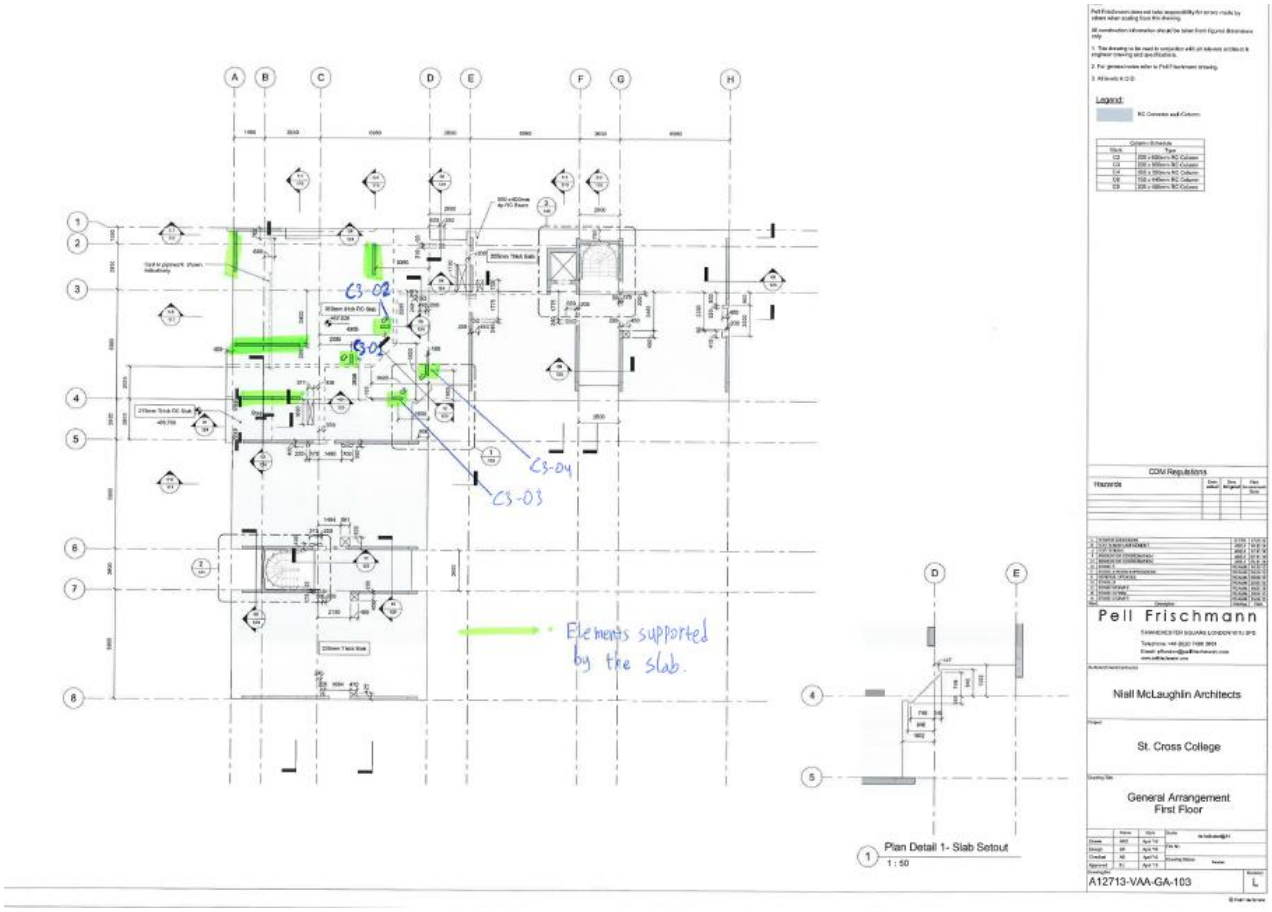

Figure 40, First floor elements supported by the first floor slab which do not continue to the ground

The maximum and minimum ULS moments are equal to +190kN*m/m and -270kN*m/m correspondingly. The maximum SLS deflection is equal to 13mm.

3.4.2. Longitudinal reinforcement of flat slabs

In order to calculate the longitudinal slab reinforcement, several parts of the slab are solved and reinforced as beams of 1 meter width. This calculation is based on the ULS output Mx and My of the model, as the slab is ULS governed (the slab has short spans and therefore small SLS deflections which do not affect the required reinforcement quantities). This leads to the calculation of a required reinforcement area per meter for each direction x, y at the bottom and the top of the slab. This calculation needs to be as accurate as possible for the different parts of the slab; however the reinforcement must have a certain degree of homogeneity in order to be practical and easy to install on site.

For this purpose, the first floor slab is divided in several areas and each area is conservatively solved by using the maximum moment that occurs in it (even if the moment is local and does not characterize the whole area). The calculations are performed quickly by using the software TEDDS developed by CSC. The parts of the slab are solved as beams of 1 meter width. This software calculates the required reinforcement of a beam according to Eurocode 2 with ULS and SLS checks. As the volume of these software calculations is very high and the method of calculation is the classic method for dimensioning a Reinforced Concrete beam, we will present a sample of the Tedds software calculations in Appendix D. The final longitudinal reinforcement mark-up of the first floor slab is shown below:

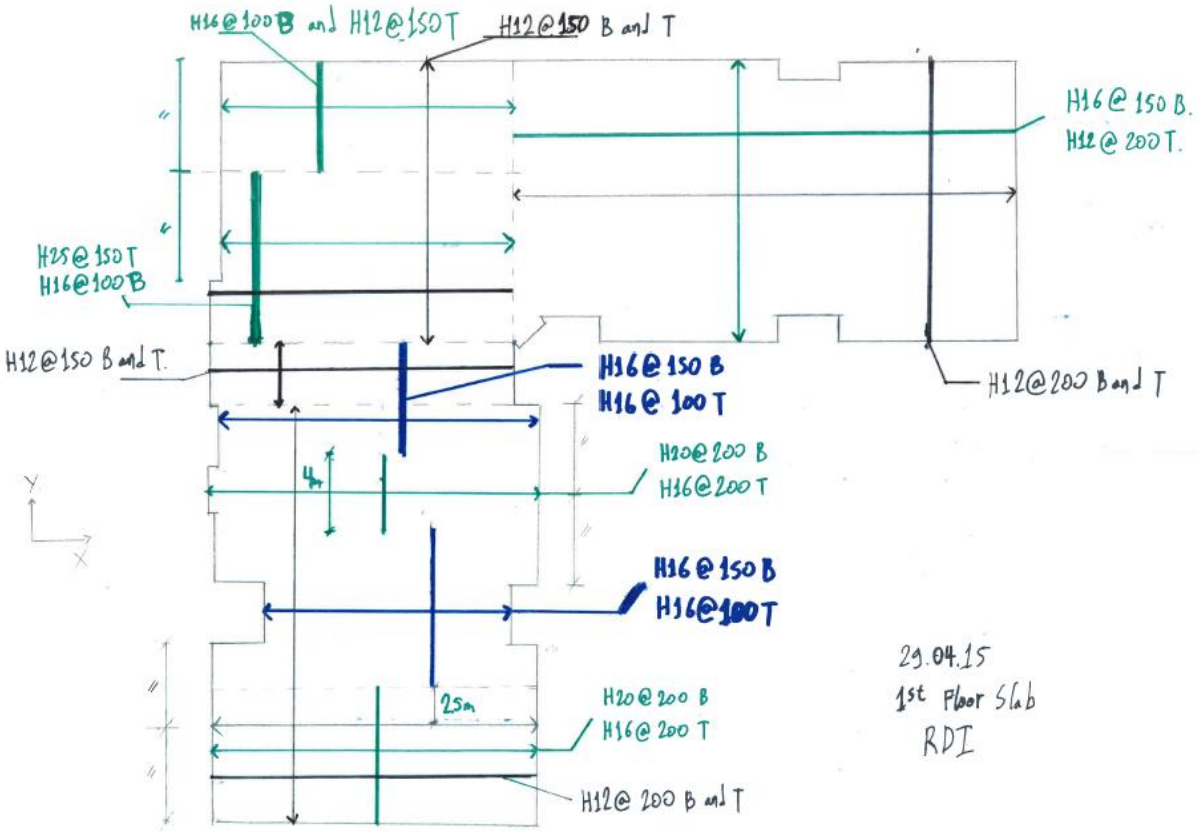

Figure 41, Longitudinal reinforcement of first floor slab

The symbol H shows the diameter of the steel bar. Also, the symbol @ defines the spacing between adjacent bars. Finally, the symbols B and T define if the reinforcement is situated at the bottom or the top of the slab correspondingly.

The Tedds software sample calculation presented in Appendix D, calculates the required longitudinal reinforcement in the area of the slab shown in the plan below (reinforcement in circle):

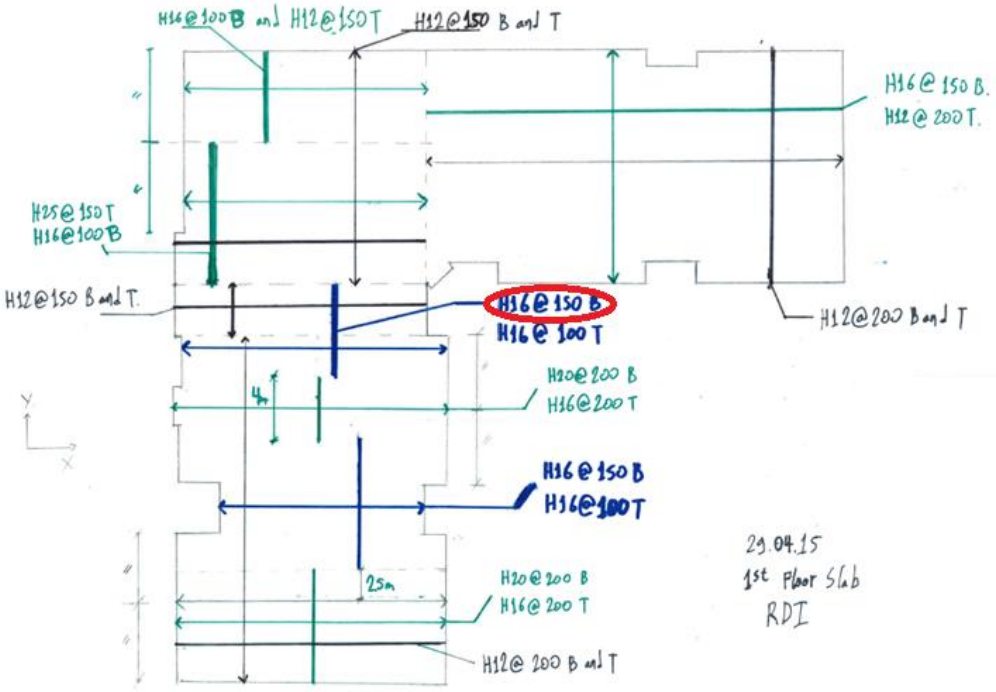

Figure 42, Longitudinal reinforcement of first floor slab, Sample Tedds software calculation according to Eurocode 2 for the area in circle

From the output of the Scia model in figure 38 we can see that the maximum moment in this area of the slab (direction y) is M_{max}= +90 kN*m/m. Also, the local slab thickness is h=225mm. The calculation is done according to Eurocode 2. Seven bars of 16mm diameter have been calculated as the required reinforcement of an equivalent beam of 1 meter width in Tedds software presented in Appendix D. This corresponds to a spacing of 150mm between the H16 bars in this part of the slab. The required longitudinal reinforcement is calculated with the exact same procedure for all the other sections of the slab.

The same applies to the second and third floor slabs the output of which can be analytically seen in Appendix C.

The final longitudinal reinforcement mark-ups of the second and the third floor slabs are:

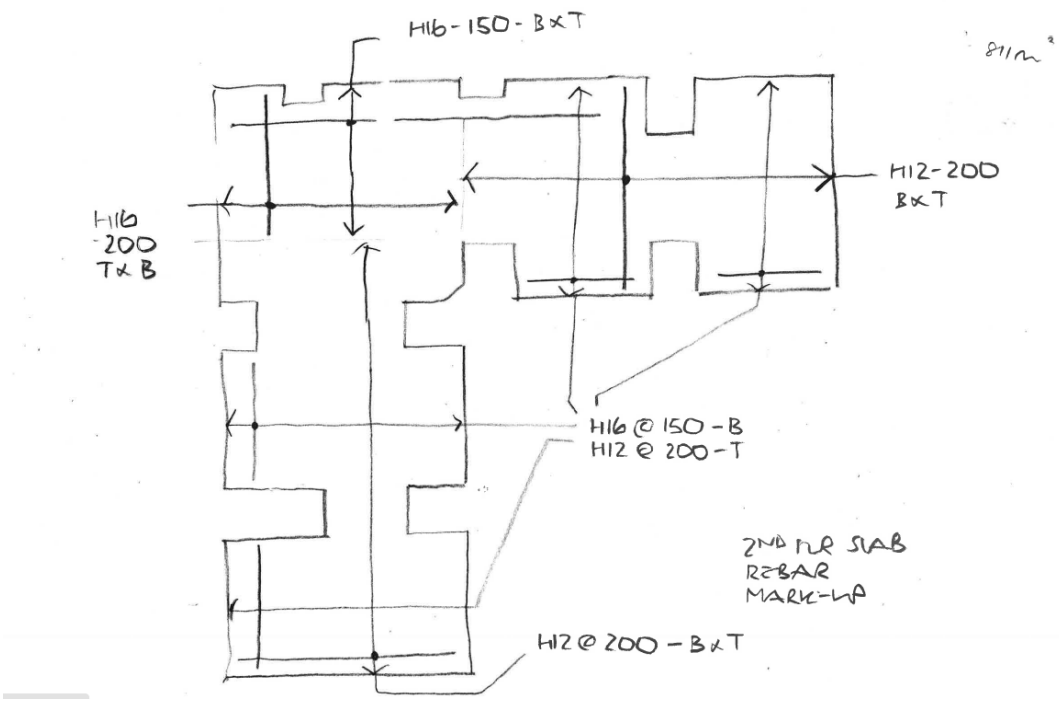

Figure 43, Longitudinal reinforcement of second floor slab

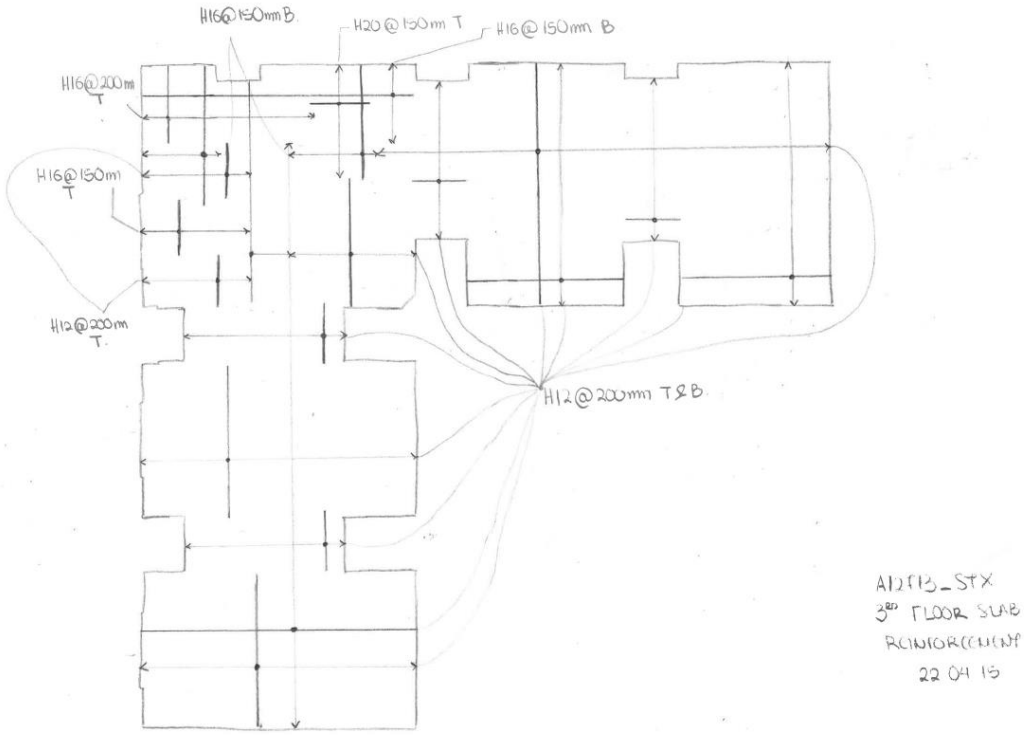

Figure 44, Longitudinal reinforcement of third floor slab

3.4.3. Overall reinforcement quantities

This paragraph presents the overall reinforcement quantities of the slabs expressed in kg/m^3. For this purpose, we have set up an excel spreadsheet that quickly and automatically calculates the total mass of the steel reinforcement of the slabs depending on the diameter of the steel bars and their spacing. This value is then divided by the volume of concrete of the slab.

PELL FRISCHMANN		Calculation of reinforcement quantities					
27/04/2015							
By : KL							
Slab Name :	2nd Floor Slab						
Part of Slab	Bars (Φ) (mm)	Spacing (mm)	Area (m2)	Weight per sq meter (kg/m2)	Percentage of laps (%)	Weight (without laps) (kg)	Weight
				Based on density of 7850 kg/m^3			
Type 1					10		
T1	12	200	265	4.440	10	1176.60	
T2	12	200	265	4.440	10	1176.60	
B1	16	150	265	10.527	10	2789.66	
B2	12	200	265	4.440	10	1176.60	
Type 2							
T1	16	150	105.9	10.527	10	1114.81	
T2	16	200	105.9	7.895	10	836.08	
B1	20	200	105.9	12.330	10	1305.75	
B2	20	200	105.9	12.330	10	1305.75	
Type 3							
T1	12	200	40	4.440	10	177.60	
T2	0	0	40	0	10	0.00	
B1	12	200	40	4.440	10	177.60	
B2	0	0	40	0.000	10	0.00	
Type 4							
T1	12	200	131.2	4.440	10	582.53	
T2	16	200	131.2	7.895	10	1035.82	
B1	12	200	131.2	4.440	10	582.53	
B2	20	200	131.2	12.330	10	1617.70	
					10		
					Σweight$_{TOTAL}$ (kg) =	15055.61	
					Volume of concrete (m^3) =	122.00	
					Reinforcement quantity (kg/m3) =	123.41	

Figure 45, Illustration of the excel spreadsheet for the calculation of reinforcement quantities

The reinforcement quantities of the slabs of the building are summarized in the table below:

Element	Reinforcement quantity			Concrete Grade
	Stage F Analytical Estimate			
	Rebar (t)	Concrete Volume (m3)	Reinforcement (kg/m3)	
First Floor Slab	24.41	145	170 kg/m3	C40/50
Second Floor Slab	19.60	122	160 kg/m3	C40/50
Third Floor Slab	15.50	122	130 kg/m3	C40/50

Table 1, Reinforcement quantities of slabs of Saint Cross College

In addition, these are some typical reinforcement quantities found in different structural elements (Source: Structural engineer's pocketbook, 2nd ed., 2004.):

Slabs	80–110 kg/m^3
RC pad footings	70–90 kg/m^3
Transfer slabs	150 kg/m^3
Pile caps/rafts	115 kg/m^3
Columns	150–450 kg/m^3
Ground beams	230 kg/m^3
Beams	220 kg/m^3
Retaining walls	110 kg/m^3
Stairs	135 kg/m^3
Walls	65 kg/m^3
'All up' estimates for different building types:	
Heavy industrial	125 kg/m^3
Commercial	95 kg/m^3
Institutional	85 kg/m^3

Source: Price & Myers (2001).

Figure 46, Typical reinforcement quantities

We observe that in Saint Cross College's slabs the reinforcement quantities are generally higher than typically expected in transfer slabs (150 kg/m^3). This can be explained by the fact that Saint Cross College's slabs are also flat and thin (225mm-350mm), which reduces the volume of concrete and increases the reinforcement quantity ratio.

3.4.4. Punching shear calculations

In figure 40 we can see four columns that are supported by the first floor slab and do not continue until the ground. They are named C3-01, C3-02, C3-03 and C3-04. Near these columns the column/slab interfaces areas are subject to high stresses, which can result in a punching shear failure. In these areas the punching shear capacity of the first floor slab must be assessed. The punching shear capacity is analytically calculated in chapters 4 and 5. In addition, the basement of the building is shown in figure 53. In the basement, there are 16 piles and 8 columns that are directly supporting or supported by the basement slab. For this reason, the punching shear capacity of the basement slab needs to be checked.

3.4.5. Beam subjected to torsion

In addition to the reinforcement of the flat slabs, the design of a beam subjected to torsion at the ground floor level was critical for the design of the building. The position of the beam can be seen in figure. The reinforcement quantities are expected to be high and should be as optimal as possible. This design is made according to Eurocode 2 BS EN 1992-1-1:2004 paragraph 6.3. The torsional design is out the boundaries of this thesis; however the analytical hand and software calculations, as well as the final results can be seen in Appendix A**.**

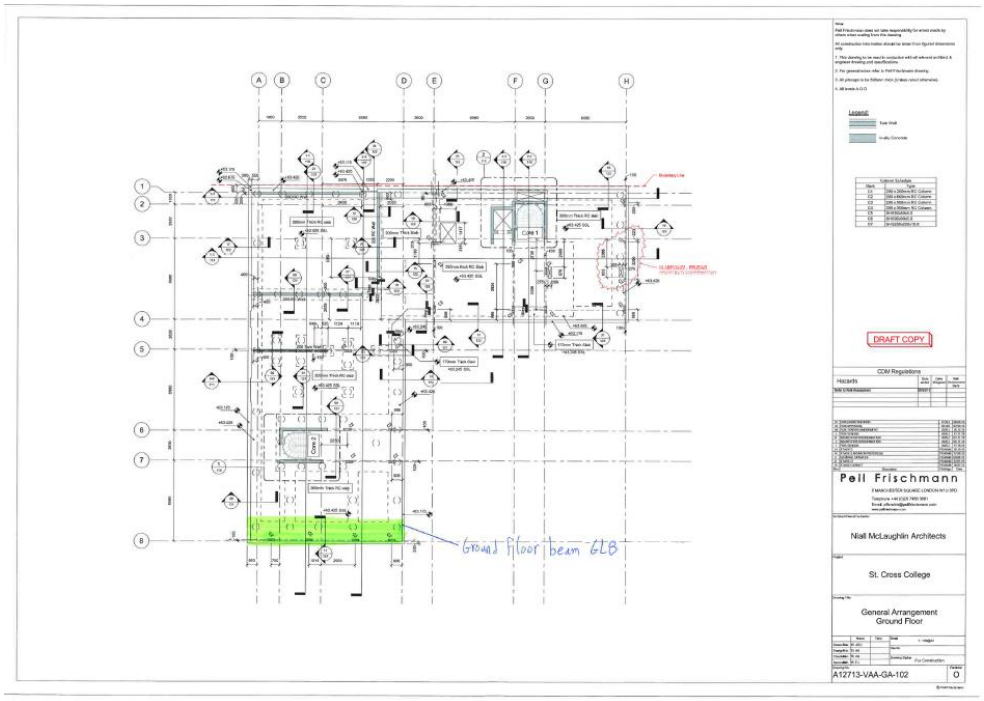

Figure 47, Location of ground beam GL8 subjected to torsion

3.5. Summary

In this chapter, the project Saint Cross College in Oxford was presented. The finite element model of the project was created in the software Scia Engineer, which was analytically shown. The output of this model was used for calculating the longitudinal reinforcement of the flat slabs, which was found to be rather high (up to 170 kg/m^3). The analytical mark-ups of these longitudinal reinforcements were presented. Furthermore, the need for 28 punching shear verifications (4 in the first floor and 24 in the basement) was expressed. These calculations are presented in chapters 4 and 5.

4. Punching shear resistance of flat slabs with conventional shear reinforcement

4.1. Introduction

In this chapter, the punching shear capacity of the first floor slab is assessed. In addition to being a flat slab, the first floor slab is also a transfer slab, as the columns and the shear walls above and below the slab are not aligned for architectural reasons. The result of this asymmetrical arrangement was the high ratio of longitudinal reinforcement. Furthermore, the slab's punching shear capacity needs to be checked at the intersections with columns C3-01, C3-02, C3-03 and C3-04. These interface areas are subject to high stresses, as the dimensions of the columns are only 200mm*600mm. The axial forces of the columns that result in a punching stress (at the Ultimate Limit State) are:

- Column C3-01 : N_1 = 880kN
- Column C3-02 : N_2 = 785kN
- Column C3-03 : N_3 = 240kN
- Column C3-04 : N_4 = 275kN

These axial forces are illustrated in the output of Scia model illustrated below:

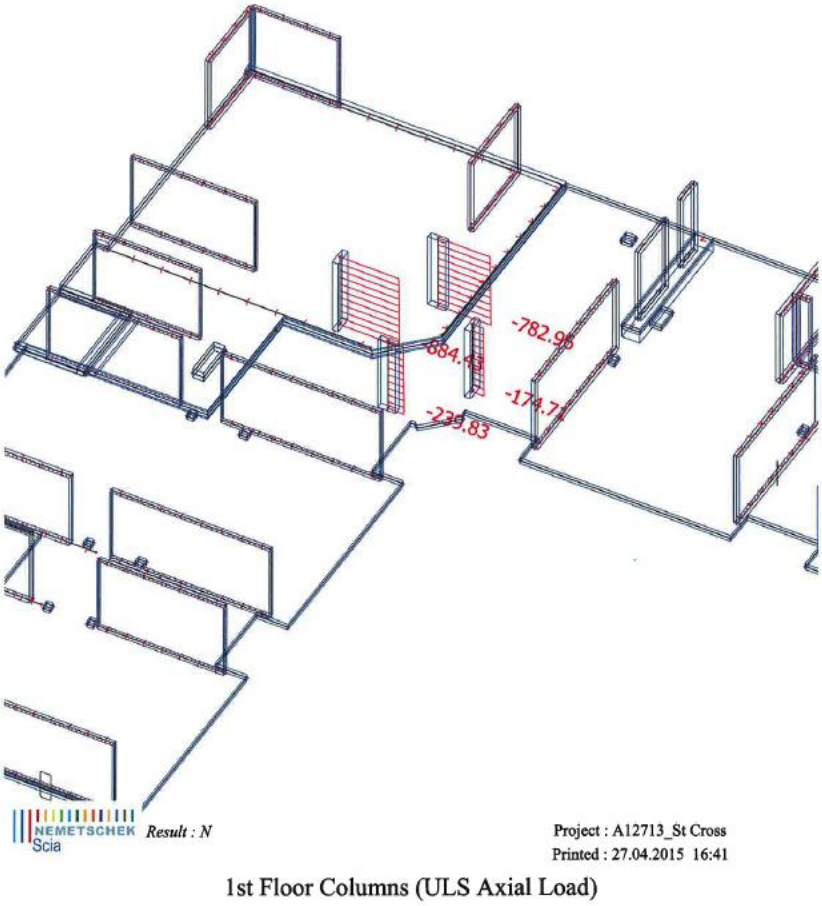

Figure 48, Scia output, ULS Axial forces of columns C3-01,02,03,04

We start by calculating the punching shear resistance of Column C3-01, which is the most stressed. The punching shear capacity must be superior to V_{Ed} = 880kN. Two conventional arrangements of punching shear reinforcements are studied. These are the orthogonal and radial arrangements proposed by Eurocode 2 in paragraph 6.4.5. The two solutions are then compared in terms of structural effectiveness, practicality and economy. These calculations are based on Eurocode 2 BS EN 1992-1-1:2004, paragraph 6.4.3.

4.2. Solution of slab/column C3-01 interface

The slab has a depth of h = 350mm and an average effective depth of d_{eff} = 291mm. The quality of concrete is C40/50. We thus calculate the distance 2d of the basic control perimeter from the column:

$$2d = \frac{d_{eff}}{tan\theta} = \frac{291}{tan26{,}6} = 580mm$$

The length of the basic control perimeter is equal to:

$$u1 = 2 * 600 + 2 * 200 + 2\pi * 2d = 5242mm$$

This perimeter is illustrated in figure 50.

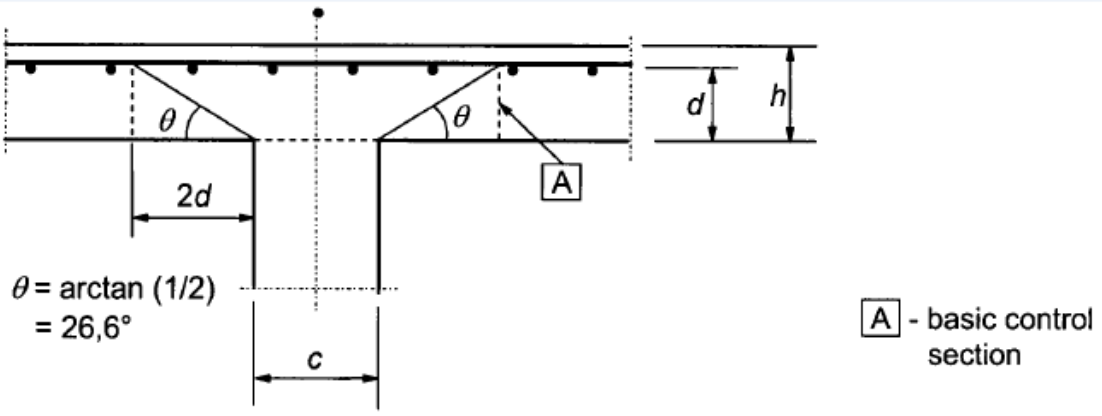

Figure 49, Distance of the basic control perimeter

4.2.1. Punching shear resistance without shear reinforcement

As presented in chapter 2, the design punching shear resistance [in MPa] of a slab at the basic control perimeter is equal to:

$$v_{Rd,c} = C_{Rd,c} * k * (100 * \rho_l * f_{ck})^{\frac{1}{3}} \geq v_{min} = 0{,}035 * k^{\frac{3}{2}} * f_{ck}{}^{1/2}$$

, where

$$C_{Rd,c} = \frac{0.18}{\gamma_c} = 0{,}12$$

$$k = 1 + \sqrt{\frac{200}{d_{eff}}} = 1{,}83 < 2$$

$$f_{ck} = 40\ MPa$$

and ρ_l relates to the bonded tension steel in y- and z- directions respectively. We conservatively choose to neglect the presence of tension steel, as requested by the scientific director. In this way the punching shear capacity of the column/slab interface will not be affected even in the case of a modification in the longitudinal reinforcement.

We can now calculate the design punching shear resistance of the slab at the basic control perimeter:

$$v_{Rd,c} = v_{min} = 0{,}035 * k^{\frac{3}{2}} * f_{ck}^{\frac{1}{2}} = 0{,}035 * 1{,}83^{3/2} * 40^{1/2} = 0{,}55\ MPa$$

For an internal column the eccentricity of the support reaction (differentiation in pure shear stresses due to presence of moments) is taken into account with the coefficient β = 1,15 of Eurocode 2. This is a safety factor that takes into account the negative effects of moment transmission from the slab to the column, as shown in Chapter 2.

The maximum punching shear capacity of the concrete slab [$V_{Rd,c}$ in MN] without shear reinforcement can be now calculated. The design punching shear resistance [$v_{Rd,c}$ in MPa] is multiplied by the effective area of the basic control perimeter. This value is then divided by the safety factor for eccentricity β = 1,15 :

$$V_{Rd,c} = \frac{V_{min} * u_1 * d_{eff}}{\beta} = \frac{0.55MPa * 5242mm * 291mm}{1.15} = 0{,}728\ MN$$

Therefore, further punching shear reinforcement is required, as:

$V_{Rd,c}$ = 0,728 MN < V_{Ed} = 0,880 MN

Firstly, we verify that the slab can withstand the stresses due to punching shear adjacent to the column. If this criterion is not satisfied, the slab's or the column's dimensions need to change in any case. The shear stress $v_{Ed,0}$ at the column periphery is:

$$v_{Ed,0} = \frac{\beta * V_{Ed}}{u_o * d_{eff}} = \frac{1.15 * 0.880MN}{1.6m * 0,291m} = 2,17 \text{ MPa}$$

,where u_o is the column periphery.

Also, according to Eurocode 2 the maximum punching shear resistance at the column periphery is equal to:

$$v_{Rd,max} = 0,5 * v * f_{cd} = 0,5 * \left[0,6 * \left(1 - \frac{f_{ck}}{250}\right)\right] * \frac{f_{ck}}{\gamma_c} = 6,72\ MPa$$

We verify that $v_{Ed,0} < V_{Rd,max}$. We can now proceed to the calculation of the required punching shear reinforcement.

4.2.2. Punching shear resistance with shear reinforcement

In this section we will calculate the required punching shear reinforcement. Two verifications must be made. Firstly, the slab with the shear reinforcement must be able to resist the punching shear stresses at the basic control perimeter. In addition, the punching shear resistance must be also verified in the outer control perimeter, where shear reinforcement is no longer provided. Two different solutions are proposed and compared. These are the orthogonal arrangement and the radial arrangement.

4.2.2.1. Orthogonal arrangement

The outer control perimeter in which reinforcement is no longer required is equal to the length along which the stress does not exceed $V_{Rd,c}$:

$$u_{out,ef,req} = \frac{\beta * V_{Ed}}{v_{Rd,c} * d_{eff}} = \frac{1,15 * 0,880MN}{0,55\ MPa * 0,291m} = 6323mm$$

The required amount of punching shear reinforcement will be now calculated for column C3-01. The total punching shear capacity (concrete and shear studs) must be superior to V_{Ed} = 880kN.

As stated in Eurocode 2 the first shear reinforcement perimeter should be placed at a distance not greater than 0,5d =145mm from the column periphery. Also, the distance between two shear reinforcement perimeters should not exceed 0,75d = 217,5mm. The required punching shear reinforcement (A_{sw}/s_r) is calculated by the expression:

$$v_{Rd,cs} = 0,75 * v_{Rd,c} + 1,5 * \frac{d}{s_r} * A_{sw} * f_{ywd,ef} * \frac{1}{u_1 * d} * sina$$

The variables of this expression were presented analytically in paragraph 2.3. The variable $v_{Rd,cs}$ is the stress applied along the first control control perimeter and is equal to :

$$v_{Rd,cs} = \frac{V_{Ed} * \beta}{u_1 * d_{eff}} = 0,663MPa$$

We can now calculate the required reinforcement which is equal to :

$$(\frac{A_{sw}}{s_r})_{req} = 2{,}71\ \frac{mm^2}{mm}$$

We choose to reinforce the slab by 12 link spurs of 3D8 @ 215mm. Each spur contains 3 shear studs of diameter 8mm placed at a distance 215mm from each other. The total number of shear studs needed is 36. The provided amount of shear reinforcement is:

$$(\frac{A_{sw}}{s_r})_{prov} = \frac{12 * 50mm^2}{215mm} = 2{,}79\ \frac{mm^2}{mm} > (\frac{A_{sw}}{s_r})_{req} = 2{,}71\ \frac{mm^2}{mm}$$

Finally, the outer effective perimeter with this arrangement is equal to:

$$u_{out,ef} = 2 * (200 + 2 * 55) + 2 * (600 + 2 * 55) + 2 * \pi * 1{,}5 * d + 8 * d = 7092mm$$

We thus obtain: $u_{out,ef} = 7092mm > u_{out,ef,req} = 6323mm$.

This means that the outer perimeter is capable of resisting the punching shear force V=880kN.

We conclude that the punching shear reinforcement is sufficient and optimal. The orthogonal reinforcement layout is illustrated in the figure below. It should be noted that only the solid part of the outer line counts as effective outermost perimeter according to Eurocode 2.

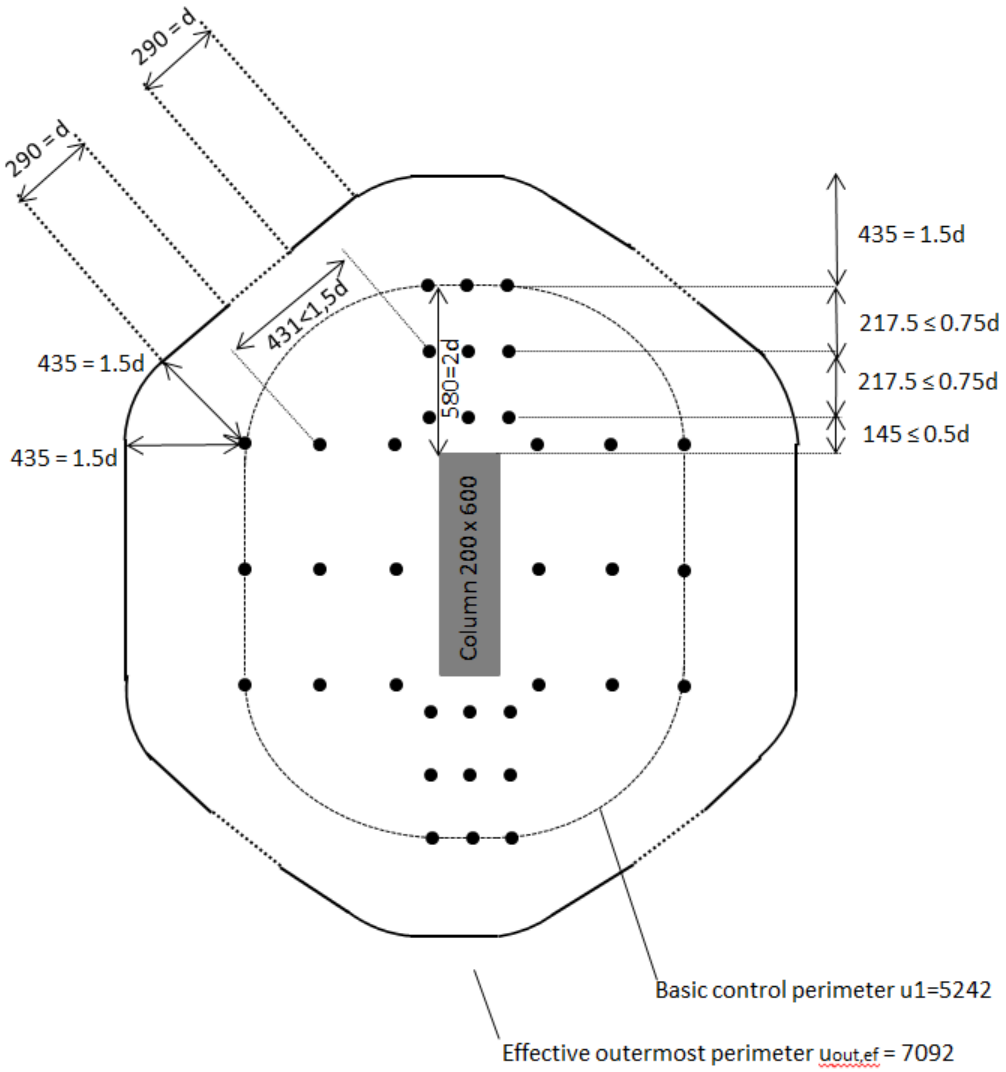

Figure 50, Orthogonal reinforcement layout for C3-01

4.2.2.2.Radial arrangement

On the other hand the same amount of shear studs can be disposed radially according to the figure below :

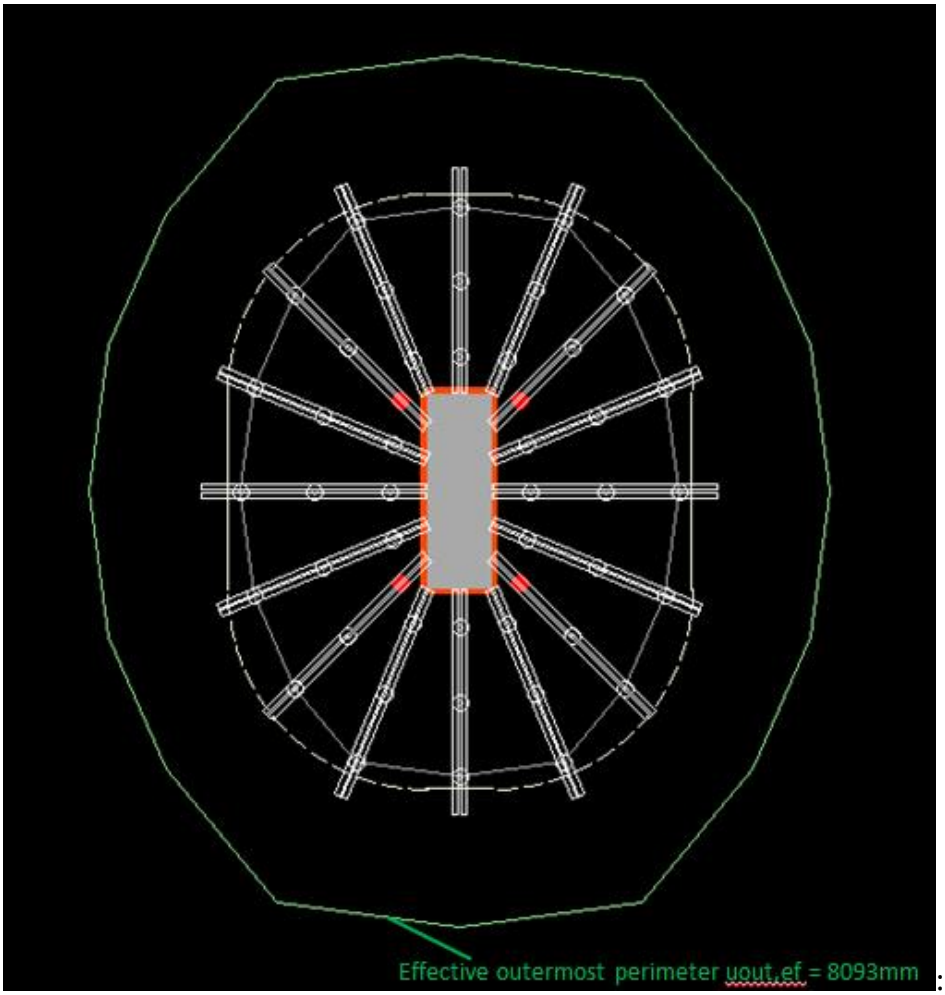

Figure 51, Radial reinforcement layout for C3-01

This layout results in a bigger effective outermost perimeter (8093mm) in comparison to the orthogonal layout (7092mm). This is explained by the fact that in this case the whole perimeter is considered to be effective, which was not the case for the orthogonal layout. This leads to the conclusion that for the same amount of shear reinforcement the radial layout is structurally more efficient for an internal column. In fact, our study shows that for each geometry (slab dimensions, column dimensions etc.) and material quality (concrete quality etc.) there is a critical punching shear load $V_{Ed,crit}$ beyond which the radial layout can no longer be used. This is explained by the fact that beyond this load $V_{Ed,crit}$ the effective part of the outermost perimeter remains constant even if extra reinforcement peripheries are added (Eurocode 2, BS EN 1992-1-1:2004 paragraph 6.4.5.). Generally, if more than 3 perimeters of shear reinforcement are required then the orthogonal arrangement is normally unsuitable (Shearail Manual , Frank , October 2010).

However, when the difference between the two layouts is not very big and the provided amount of shear reinforcement occurs to be the same, the orthogonal layout is an interesting solution as it is more practical and easy to install. The figure below compares the effective outermost perimeters of the two arrangements for different loadings. For each loading the exact same amount of shear reinforcement is used for both layouts.

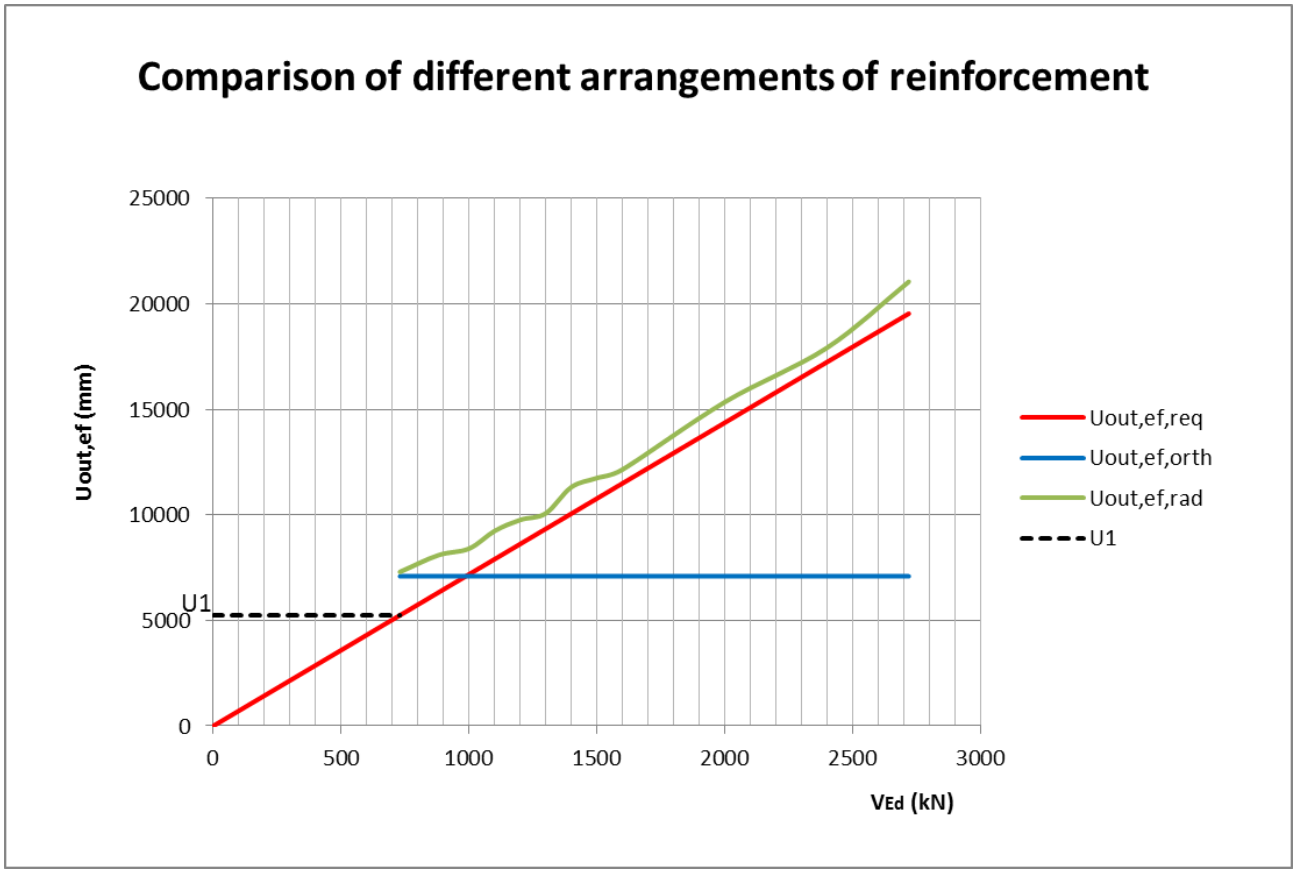

Figure 52, Effective outermost perimeters of the orthogonal and radial arrangement

When the first control perimeter (black line) is smaller than $U_{out,ef,req}$ (red line), then the area (length * depth of the slab) of the first control perimeter is sufficient to resist the punching shear strees and no additional shear reinforcement is required. When the load becomes equal to V=728kN, then additional punching shear reinforcement is required. The effective outermost perimeter of the radial arrangement (green line) is always bigger than the one

provided by the orthogonal arrangement (blue line) for the exact same amount of shear reinforcement. This means that the radial arrangement is structurally more efficient.

In addition, the effective outermost perimeter of the radial arrangement remains constant regardless of the number of reinforcement peripheries, as explained above. For this example, the critical punching shear load $V_{Ed,crit}$ beyond which the radial layout can no longer be used is equal to $V_{Ed,crit}$ = 987 kN . Finally, according to Eurocode 2 the column fails adjacent to the column periphery at a load of 2720kN, which is the maximum load that the intersection can be designed to resist.

We conclude that:

- For loads less than 728 kN no punching shear reinforcement is required
- For loads between 728kN and 987kN it is preferable to use the orthogonal layout due to its practicality on site
- For loads between 987kN and 2720kN only the radial layout can be used
- The radial layout is structurally more efficient and thus more economical that the orthogonal
- The orthogonal layout is more practical and easy to install than the radial layout

4.3. Solution of other column/slab interfaces in the first floor slab

The verification of the punching shear resistance of columns C3-02, 03, 04 is performed with the same procedure as for column C3-01 according to Eurocode 2. For faster calculation, an excel spreadsheet for punching shear verifications developed by The Concrete Centre is being used. It is found that columns C3-03 and C3-04 do not need additional punching shear reinforcement. The calculations in the excel spreadsheets can be seen in Appendix E.

4.4. Basement Slab

As mentioned in chapter 3 paragraph 3.4.4. an additional punching shear verification must be performed for the 16 piles and 8 columns that support/are supported by the basement slab. The output of Scia engineer presented in figures 54 and 55 shows the axial forces of the columns and the piles that may result in a punching shear failure in the basement slab. The 16 punching shear verifications for the piles are performed according to Eurocode 2 using the software Shearail developed by FRANK. The method is exactly the same with the one shown analytically for the column C3-01 of the first floor slab in paragraph 4.2. The software Shearail enables us to perform these calculations very quickly. In addition, the 8 punching shear verifications for the columns are performed using the excel spreadsheet developed by The Concrete Centre as mentioned in paragraph 4.3. The basement slab plan is presented below. Each pile and column is named with a reference number that is used in the calculations for the distinction of the elements.

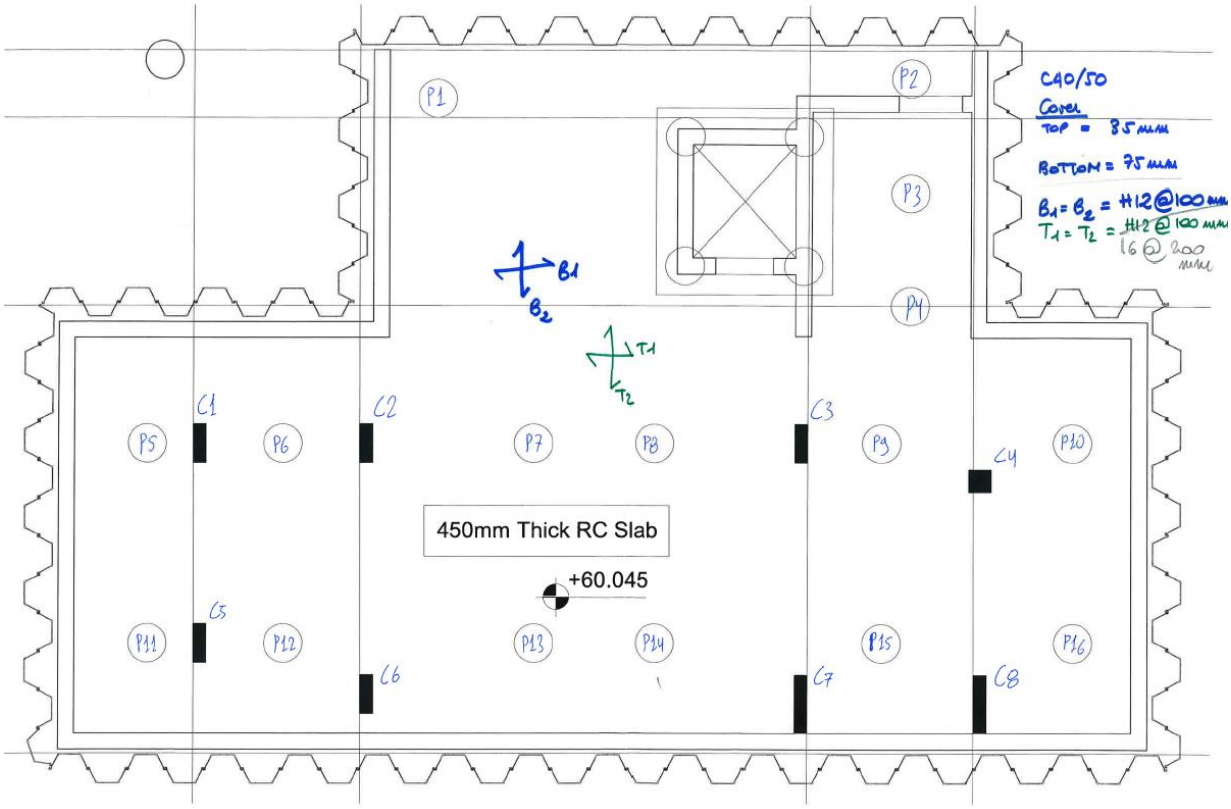

Figure 53, Basement plan and pile/column reference numbers

The columns/piles are divided into three categories according to their location in the slab:

- Internal columns/piles (columns 1,2,3,4,5 and piles 7,8,9)
- Edge columns/piles (columns 6,7,8 and piles 3,4,6,12,13,14,15)
- Corner columns/piles (piles 1,2,5,10,11,16)

Each category is solved according to Eurocode 2 instructions.

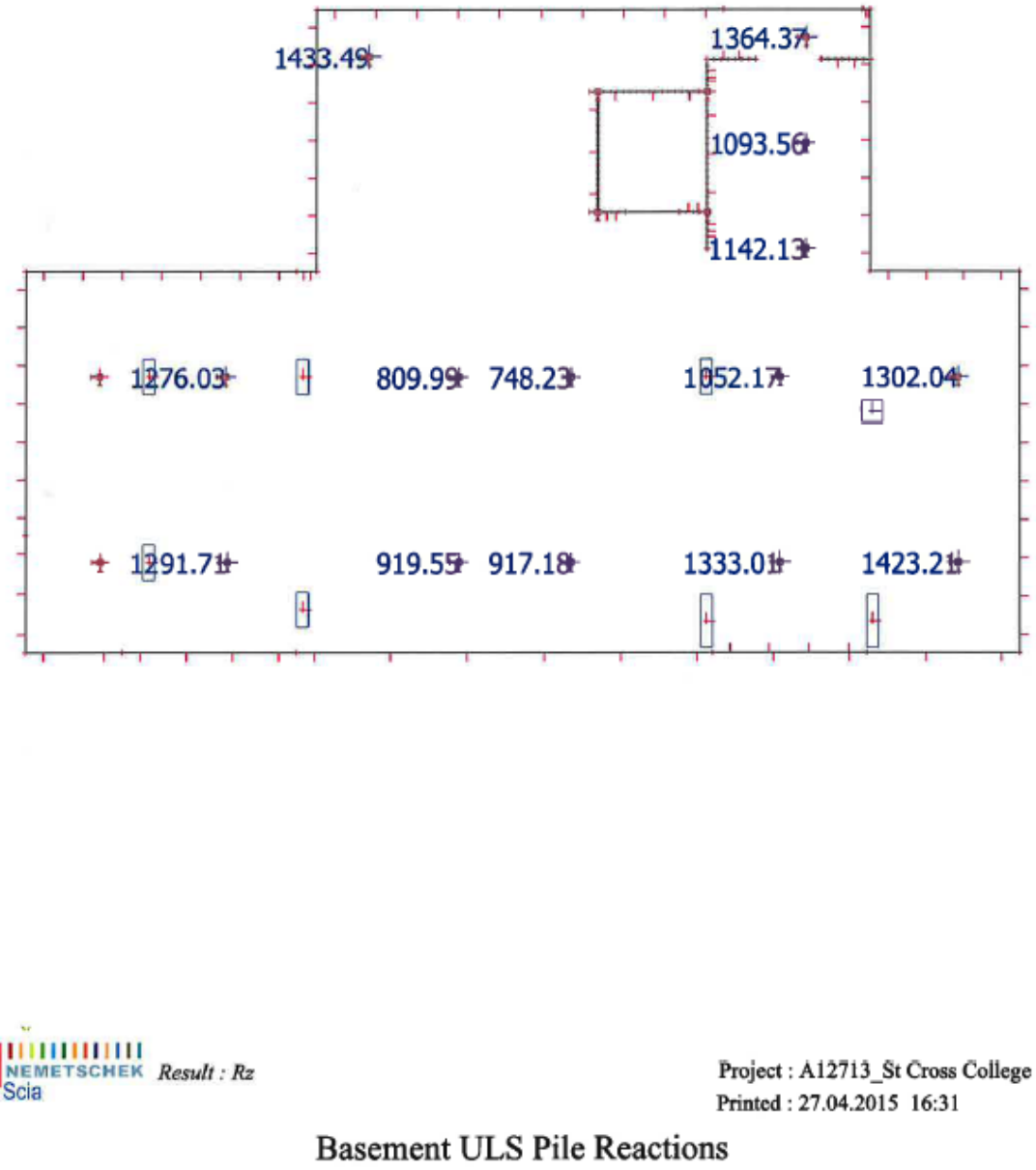

Figure 54, Scia engineer output, ULS axial forces of piles at the basement slab

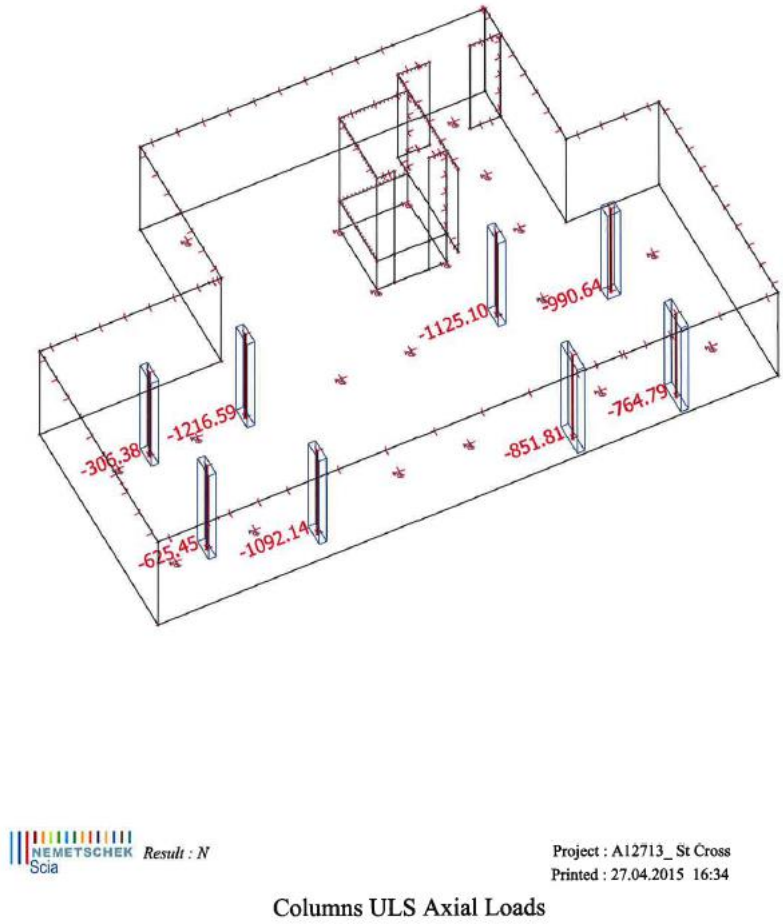

Figure 55, Scia engineer output, ULS axial forces of columns at the basement slab

The calculations for the 16 piles and the 8 columns are analytically shown in Appendix F. The thickness of the basement is slab is h = 450mm and the concrete quality is C40/50. The considered longitudinal reinforcement of the basement slab and the dimensions of each pile/column are also analytically shown in the Appendix F.

We calculate that five column/slab and thirteen pile/slab interfaces need additional punching shear reinforcement. This is explained by the fact that the basement slab is relatively thin (450mm) and the axial forces of the piles and columns are relatively high. Another good solution would be to increase the overall thickness of the slab to 500-550mm and/or use a concrete of better quality.

4.5. Summary

In this chapter, the analytical conventional method according to Eurocode 2 for calculating the punching shear capacity of a slab/column interface was demonstrated. The formulas were applied to a specific slab/column interface in the first floor slab of Saint Cross College in Oxford. Two possible arrangements were examined: the orthogonal and the radial arrangements. The latter was found to be structurally more efficient. Furthermore, twenty eight calculations were performed for the verification of the adequate punching shear resistance of twelve slab/column and sixteen slab/pile interfaces.

5. Punching shear resistance of flat slabs with Fiber-Reinforced Polymers (FRP)

5.1. Introduction

In this chapter, an alternative punching shear strengthening method using FRP sheets is proposed for column C3-01. The formulas mentioned in chapter 2 are being used.

5.2. Case of solid carbon sheet applied to the whole critical perimeter

In chapter 5 it was calculated that the punching shear resistance of concrete is $V_{Rd,c}$= 0,728MN. The total resistance must be superior to 0,880 MN. This means that the FRP sheet must provide a resistance of 0,880 - 0,728 = 0,152MN. For this study, carbon sheets will be used as reinforcement. There are many types of carbon sheets of various properties with a longitudinal tensile strength ranging from 1000MPa to 3000 MPa, as shown in table 1. Carbon fibres exhibit high strength and stiffness. Their strength and tensile modulus are stable as temperature rises and they are also highly resistant to aggressive environmental factors (fib, FRP reinforcement in RC structures, September 2007). The most important disadvantage of carbon fibres is their high cost. For this particular study, we choose to use carbon sheets of low tensile strength (1050MPa longitudinal tensile strength and 49MPa transverse tensile strength, Material strength source: L. MICHEL, E. FERRIER, D.BIGAUD, A. AGBOSSOU, 2007), in order to minimise the cost. Besides, this column/slab intersection needs only a strengthening of 0,152MN.

The thickness of the sheet is 0,762mm, which is the smallest one found in the market. The formula presented in chapter 2 is being used for the calculation of the sheets' strength. The sheet is applied to the whole surface that needs strengthening (Figure 24 , Arrangement (a)). Furthermore, the resistance of the sheet is not isotropic. It depends by the orientation of the fibres and the forces. We calculate:

$$v_{Rd,f} = \frac{\psi}{\chi} * \frac{u_{1,f} * t_f * n_p}{u_1 * \gamma_f} * (\frac{\sigma_{f,90}}{2 * c_1} + \frac{\sigma_{f,0}}{2 * c_2})$$

$$\Rightarrow \; v_{Rd,f} = \frac{2.5}{1} * \frac{5{,}242m*0{,}000762m*1}{5{,}242m*1{,}15} * \left(\frac{1050MPa}{2*0{,}6m} + \frac{49Mpa}{2*0.2m}\right) = 1{,}65\ MPa$$

$$\Rightarrow \; V_{Rd,f} = \frac{v_{Rd,f}*u_1*\ d_{eff}}{\beta} = \frac{1{,}65MPa*5{,}242m*0{,}291m}{1{,}15}$$

$$\Rightarrow \; V_{Rd,f} = 2{,}18MN$$

This is largely superior to the resistance needed and the resistance criterion is satisfied. Furthermore, the sheet must be anchored to a length of 0,20m outside the first control perimeter in order to have an outer control perimeter bigger than 6,323m as presented in chapter 4 (refer to figure 26). This is the outer perimeter where the concrete must be able to resist the punching shear stress without the additional benefit from the FRP sheets. The area of the sheet's surface can be now easily calculated. The area is equal to A = 3,80m^2.

5.2. Case of carbon crossed strips

In paragraph 6.2., we can observe that the punching shear resistance provided is largely superior to the one required. The use of crossed strips (figure 24 , arrangement (b)) instead of a solid rectangular sheet of carbon fibres has the advantage of optimizing the quantity of the material used and consequently the total cost. In addition, the orientation of the carbon fibres is always parallel to the length of the strip. This means that the characteristic resistance of a strip is always equal to the longitudinal tensile strength of the carbon fibre polymers (1050MPa for this case). This applies to all strips (oriented at 0 or 90 degrees), as the carbon fibres are always oriented towards the same direction (0 or 90 degrees correspondingly).

In this case, the transverse tensile strength, which is very low (49MPa for this case) is irrelevant to the problem. This is another advantage of this method.

The formula presented in chapter 2 is being used for the calculation of the total punching shear resistance of the strips. We choose to dispose 5 carbon strips in each direction. Each strip has a width of 5cm and a thickness of 0.763mm. The total resistance of the strip can be now calculated:

$$v_{Rd,f} = v_{Rd,fy} + v_{Rd,fz} =$$

$$= \frac{\psi}{\chi} * \frac{u_{1,fy} * w_{fy} * t_{fy} * n_{py}}{u_1^2 * \gamma_f * d_{eff}} * f_{fd} + \frac{\psi}{\chi} * \frac{u_{1,fz} * w_{fz} * t_{fz} * n_{pz}}{u_1^2 * \gamma_f * d_{eff}} * f_{fd}$$

$$= 2 * \left[\frac{2.5}{1} * \frac{0{,}25m * 1m * 0{,}000762m}{(5{,}242m)^2 * 1{,}15 * 0{,}291m}\right] * 1050\ MPa = \ 0{,}115MPa$$

and thus :

$$V_{Rd,f} = \frac{v_{Rd,f} * u_1 * \ d_{eff}}{\beta} = \frac{0{,}115MPa * 5{,}242m * 0{,}291m}{1{,}15} = 0{,}153\ MN$$

,where the variables are the same as in 5.2. except for:

$f_{fd} = 1050Mpa$

and $u_{1,fy} = u_{1,fz} = 5 * 4 * 0.05 = 1m$

In this way the total punching shear resistance of the slab is calculated to be

$V_{Rd,cf} = \ V_{Rd,c} + V_{Rd,f}$ = 0,728MN + 0, 153 MN = 0,881 MN > V_{Ed} = 0,880MN

This solution is adequate and economically optimal.

We calculate the total area of FRP carbon sheet used as carbon strips. The required length of anchorage l_{anc} = 0,20m calculated in paragraph 5.2. is equally taken into account :

$$A = 5 * 0{,}05m * (c1 + 2 * 2d + 2 * lanc) + 5 * 0{,}05 * (c2 + 2 * 2d + 2 * lanc) = 1m^2$$

, where:

c1 and c2 are the column dimensions equal to 0,6m and 0,2m correspondingly

d is the effective depth of the slab equal to 0,291m

l_{anc} is the required length of anchorage equal to 0,2m

In the case of strips we use **74% less carbon sheet** ($1m^2$ instead of $3,80m^2$) than in the case of a solid carbon sheet. This solution is more optimal in terms of economy.

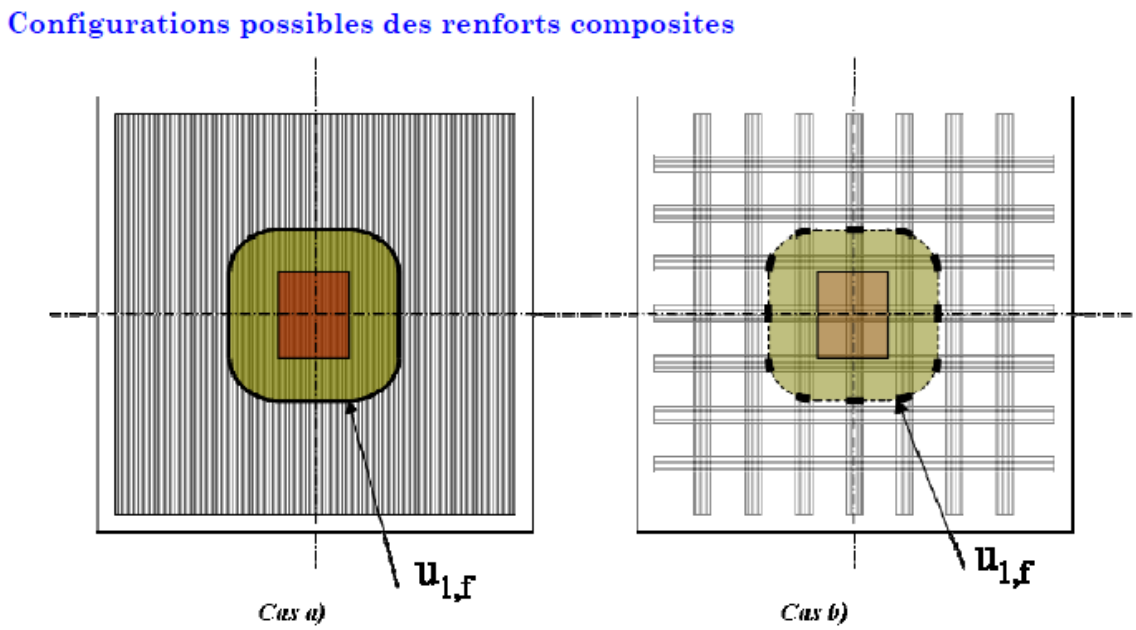

Possible arrangements of FRP solid sheets (a) and crossed FRP strips (b) as presented in chapter 2, figure 24

5.3. Comparison of the punching shear strengthening methods

In this paragraph, we will compare the conventional and the innovative punching shear strengthening methods presented in chapters 4 and 5.

A) Comparison in terms of economy

We assume the prices below for the steel shear studs and carbon FRP sheets. These prices are indicative as they can change at any minute depending on the trends of the market and the supplier :

- 1,2£/kg = 1,72 euros / kg for the steel shear studs (Source: Pell Frischmann)
- 6 euros / m^2 for the FRP carbon sheets (Source: http://www.alibaba.com/product-detail/Carbon-fiber-reinforced-polymer_1749666274.html)
- 1,8 euros / kg for the epoxy resin used to bond the FRP sheets to the RC slab (Source : http://www.alibaba.com/product-detail/Price-liquid-epoxy-resin_60213594608.html?spm=a2700.7724857.35.1.x2g4Is)

In chapter 4 we added 36 shear studs of diameter 8mm which weight 0,395kg/m. For the effective depth of the slab (d=0,291m) we calculate the total mass of steel needed:

$$W = 36 * 0{,}291m * \frac{0{,}395kg}{m} = 4{,}138kg$$

This mass corresponds to a price of 4,138kg*1,72euros/kg = **7,11 euros**.

As far as the FRP carbon sheets are concerned, in chapter 4 we calculated a required area of A=3,80m^2 that needs to be applied in the case of a solid sheet. This corresponds to a price of 3,80m^2 * 6euros/m^2 = **22,8 euros.** This solution was optimized by using carbon fiber strips. The new required area is equal to 1m^2 which corresponds to a price of 1m^2*6euros/m^2 = **6 euros.** Assuming that the density of the epoxy resin is equal to 1,1g/cm^3 and its thickness is 1mm (source: http://www.netcomposites.com/calculators/resin-formulae), the epoxy resin

will cost C = $1m^2$ * 1mm * 1,1 g/cm^3 * 1,8 euros/kg = **2 euros**. The final price of the optimised FRP strips, including the use of the epoxy resin, is 6 + 2 = **8 euros**.

We conclude that the conventional method of using steel as a method of reinforcement is more economical in the short term. However, if we take into account the fact that the FRP sheets are highly anti-corrosive, the carbon fiber polymers can be considered to be more economical in the long term. Besides, the use of FRP has emerged in the past decade as the most promising new technology in construction to overcome the problem of corrosion. In addition, the price of 8 euros is not much superior to the steel solution which costs 7,11 euros. Thus, the use of FRP sheets is definitely the recommended solution if we take into account the fact that it is the most durable one and can also be used to quickly repair and reinforce existing structures. Besides, in this case the labour costs for providing conventional steel reinforcement would be extremely high.

B) Practicality and use

The use of FRP sheets is definitely more practical, as it is a very quick method for strengthening different structural elements. The sheets are glued-bonded externally to the structural element with the use of an epoxy matrix. This technique also offers the unique possibility of strengthening easily existing structures that need additional reinforcement. This would be extremely difficult with the use of the conventional methods. Furthermore, the rapid application/bonding of FRP sheets to the structural element reduces the hours of labour and consequently the labour cost. This is another advantage of the method which indirectly affects the overall economy.

5.4. Summary

In this chapter, the innovative solution of using FRP sheets to prevent a punching shear failure was demonstrated. The theoretical formulas were applied to a specific column/slab interface in the first floor slab of Saint Cross College. The innovative solution was economically optimised by using FRP strips instead of a whole solid sheet. The solution was then compared to the conservative solution of steel reinforcement. It is suggested that the FRP strengthening method is more practical and economical in the long term, however the decision is subjective and relies on the priorities of the client.

Conclusion

This dissertation concerned the detailed design of flat slabs of the building «Saint Cross College» in Oxford, the structural study of which is being conducted by Pell Frischmann. The thesis also includes research on the punching shear capacity of slabs which was presented in chapters 2, 4 and 5. This paragraph summarises the results of our study and presents the main conclusions:

- Generally, a flat slab is thicker than an equivalent slab supported by beams. However, the thickness of the flat slab is smaller than the overall thickness of the equivalent regular slab plus the height of its beams (refer to chapter 1). This leads to the optimisation of the interior space of the building which makes flat slabs a very common and desirable solution.

- In our building, the vertical misalignment of the columns, walls and shear walls between floors led to the additional loading of many slabs, as they had to transfer the forces of the columns above the slab to the columns below. In addition, the slabs of the building are flat and directly supported by columns without the use of any beam. Consequently, the required longitudinal reinforcement of most of the slabs was very high, as presented in chapter 3. Also, the misalignment of the columns created the need for many punching shear verifications and additional punching shear reinforcement. This led to a required reinforcement ratio of 170kg of steel per cubic meter of concrete. We conclude that it is preferable to avoid designing a slab that acts at the same time as a flat and transfer slab. The good communication between architects and civil engineers is a prerequisite for achieving this task.

- The methods of providing additional punching shear reinforcement to a flat slab include (as presented in chapter 2) the use of different types of steel reinforcement, the use of FRP sheets, the use of concrete of better quality, changing the dimensions of the column or the slab, the use of local column heads and some prestressing techniques. As long as the section fails at the basic control perimeter, the use of steel or FRP sheets is an acceptable solution for providing additional reinforcement. However, when the section starts to fail at

the column periphery as well (see paragraph 2.3.2.) the only solution is to change the dimensions of the column/slab intersection or increase the quality of concrete.

- According to our research the radial layout of punching shear reinforcement is structurally more efficient than the orthogonal layout for internal columns (please refer to chapter 4). However, the orthogonal layout is more practical and easy to install on site. For this reason, we concluded that when the provided reinforcement occurs to be the same for both layouts the orthogonal layout is preferable. This applies to small punching shear loads. For bigger loads, we concluded that the effective outer perimeter provided by the orthogonal layout is not enough to resist the punching shear stresses. The radial layout must be used in this case.

- An innovative method to increase the punching shear resistance of a RC slab is to bond externally FRP sheets. Strengthening slabs with FRP sheets is simple, does not require excessive labour, does not affect the architectural character of the building and offers the unique possibility of repairing existing structures very quickly. In addition, the use of FRP sheets is considered to be a very promising technology for overcoming the problem of corrosion.

- In this thesis, the FRP method was compared to the conventional method of steel reinforcement (please refer to chapter 5). The results showed that the two methods are comparable in terms of economy. A further economic optimisation of the FRP method was achieved by using crossed FRP strips instead of solid FRP sheets. This strategy reduced the total area of the externally bonded FRP sheets which consequently led to a cost reduction. Furthermore, if we take into account the fact that the FRP sheets are highly anti-corrosive, the FRP solution can be considered to be more economical in the long term.

References

[1] **ACI** ; Building Code Requirements for Reinforced Concrete and Commentary (ACI 319-95/ACI 318R-95), American Concrete Institute Committee 318, Detroit, 1995, 353 pp.

[2] **ACI** ; Provisional Design Recommendations for Concrete Reinforced with FRP Bars (ACI 440R-98), American Concrete Institute Committee 440, Farmington Hills, Michigan, Draft 2, September, 1998, section 6.5.

[3] **ALBRECHT U.** ; Design of flat slabs for punching – European and North American practices. Cement Concrete Compos 2002;24:531-8.

[4] **ALKARANI, RAVINDRA. R** ; Evaluation of punching shear in flat slabs, International Journal of Research in Engineering and Technology, IC-RICE Conference Issue ; 2013

[5] **AS 3600** ; Australian Standard Concrete Structures, Standards Australia, Homebush, NSW

[6] **ASSOCIATION FRANCAISE DE GENIE CIVIL** ; Réparation et renforcement des structures en béton armé au moyen des matériaux composites ; 2010

[7] **BIRKLE G. , DILGER W.** ; Influence of slab thickness on punching shear strength, ACI Structural Journal, vol.105, no.2, March, pp.180-188

[8] **BS 8110** ; Code of Practice for Design and Construction, British Standards Institution, Part 1, London, 1985,124pp.

[9] **EL. GHANDOUR, A.W., PILAKOUTAS, K., WALDRON,P**. ; Punching shear behaviour of fiber reinforced polymers reinforced concrete flat slabs: experimental study, Journal of Composites for Construction, 7 (3), pp. 258-265; 2003

[10] **EUROCODE 2** ; pr EN 1992-1-1 ; Design of concrete structures, part 1-1 : General rules and rules for buildings; 2008

[11] **fib** ; Punching of Structural Concrete Slabs, International Federation For Structural Concrete, Lausanne

[12] **MENETREY P.** ; Synthesis of punching failure in reinforced concrete. Cem Concr Comp 2002;24:497-507

[13] **MICHEL L., FERRIER E., BIGAUD D., AGBOSSOU A.** ; Criteria for Punching Failure Mode in RC Slabs Reinforced by Externally Bonded CFRP. Journal of Composite Structures, Elsevier ed., Volume 81, Issue 3, December 2007, Pages 438-449.

[14] **MOSALLAM AS, MOSAL KM.** ; Strengthening of two-way concrete slabs with FRP composite laminates. Construct Build Mater 2003; 17:43-54.

[15] **PILAKOUTAS, K. and LI, X.,** ; Alternative shear reinforcement for reinforced concrete flat slabs, Journal of Structural Engineering, ASCE, vol. 129, no.9, pp. 1164-1172 ; 2003

[16] **POLAK, MA. , EL-SALAKAWY, E.,HAMMILL, NL.** ; Shear reinforcement for concrete flat slabs, in MA Polak(ed.), Punching Shear in Reinforced Concrete Slabs, vol. SP-232, American Concrete Institute Farmington Hills, Michigan.

[17] **ROCHDI E.H., BIGAUD D., FERRIER E., HAMELIN P.**; Ultimate behaviour of CFRP strengthened RC flat slabs under a centrally applied load. Composite Structures. 72(2006)69-78.

[18] **THEODORAKOPOULOS DD** ; Swamy RN. Ultimated punching shear analysis of slab-column connections. Cement Concrete Compos 2002;24-509-21.

[19] **VIKUNJ K. TILVA, B. A. VYAS, PARTH THAKER** ; Enhancing the punching shear resistance of flat plates using shear heads, shear studs rails and shear stirrups: a comparative study, Volume 04, No 06 SPL, pp. 596-599, October 2011.

[20] **WIGHT, JK. , MACGREGOR, JG.** ; Reinforced Concrete, Pearson Prentice Hall, New Jersey.

[21] **ALIBABA PRODUCTS**. [15 JUNE 2015], http://www.alibaba.com/product-detail/Carbon-fiber-reinforced-polymer_1749666274.html

Appendices

APPENDIX A: CALCULATION OF REINFORCEMENT TO RESIST TORSION FOR GROUND FLOOR BEAM GL8

The calculations are done according to Eurocode 2 paragraph 6.3. The longitudinal and shear reinforcement are firstly calculated for a beam without torsion by using the software Tedds developed by CSC. This calculation is done according to Eurocode 2 and is presented in the end of the appendix. Then, according to Eurocode 2 paragraph 6.3. an additional longitudinal and shear reinforcement must be calculated in order to resist the torsional effect. The analytical hand calculations are presented in this appendix. Also, the detailed section in scale of the beam with its reinforcement is presented.

The Scian Engineer ULS output for ground floor beam GL8 is:

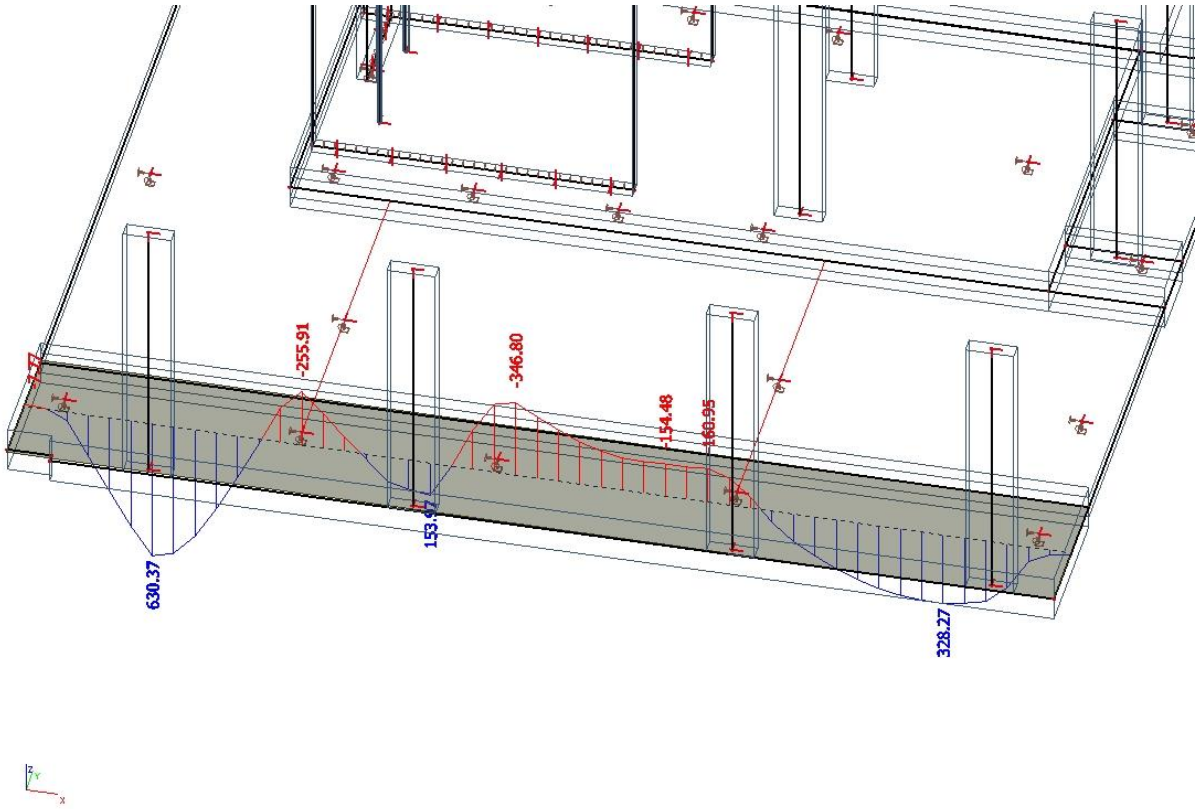

Figure 56, Bending moment My in beam GL8

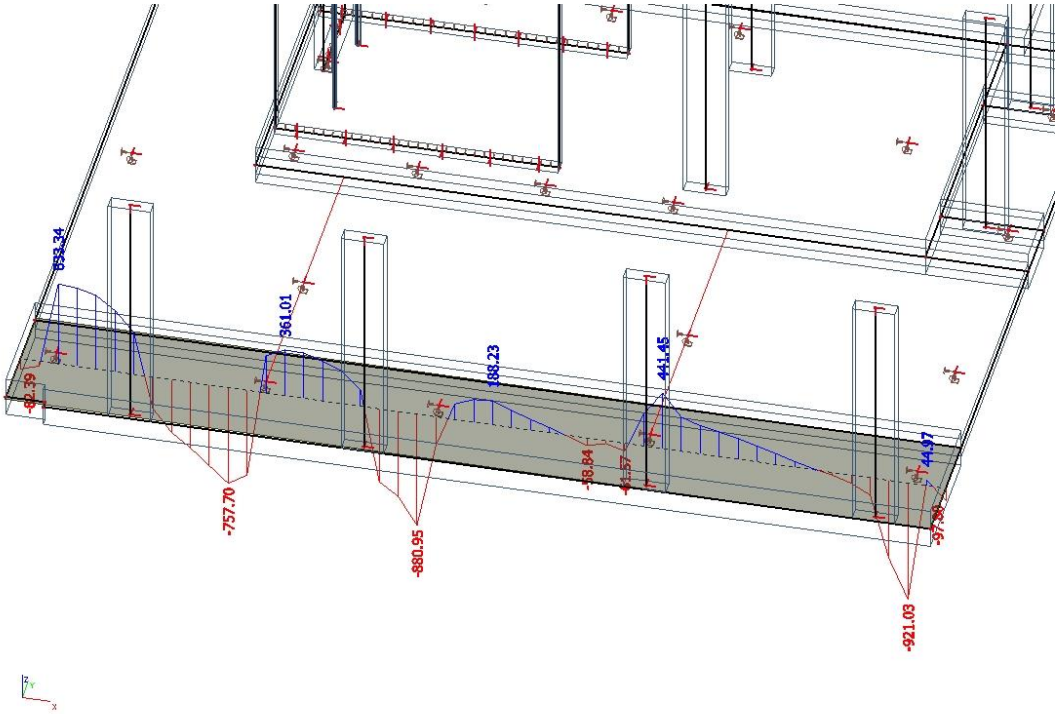

Figure 57, Shear force V in beam GL8

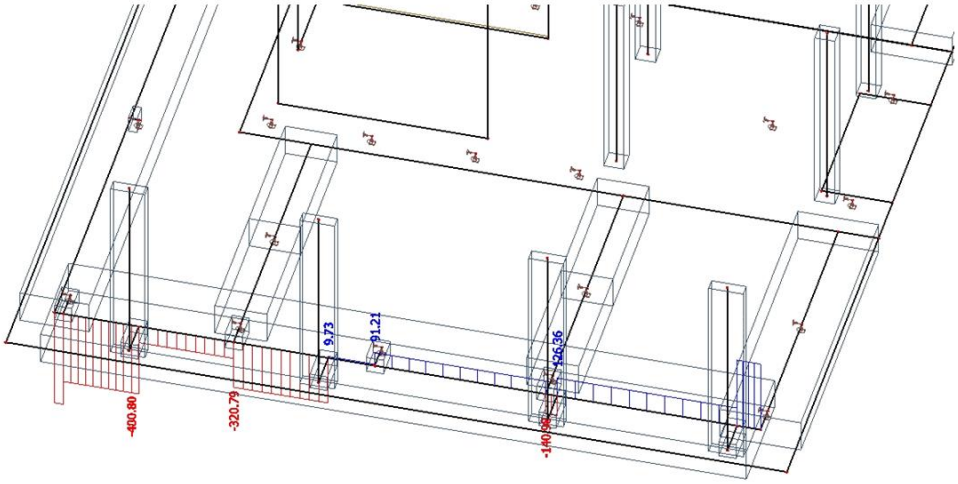

Figure 58, Torsional moment Mx in beam GL8

The detailed hand calculations are now presented.

Pell Frischmann

Project/Calc. No. A13030YAA

Sheet No. 1

CALCULATIONS | Project Saint Cross College | Date 20/03/15

Subject RC beam design | by KL | Chkd

Ref. | Output

• Design without torsion

From the bending moment diagram we can see that $M_{max} = 650\,KN\cdot m$ and $M_{min} = -350\,KN\cdot m$.
From the shear forces diagram we can see that $V_{max} = 930\,KN$.
The beam's dimensions are:

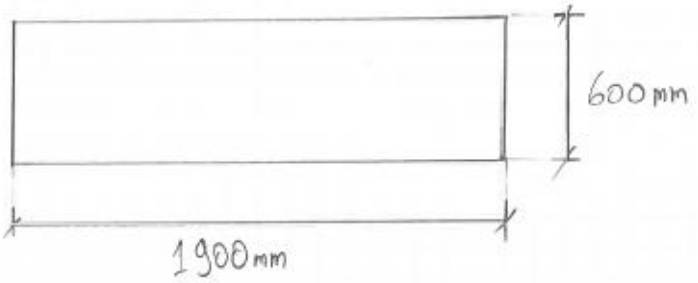

By using the RC beam design - Tedds we easily calculate that the total required section for the top bars is $A_{s,req_{TOP}} = 2110\,mm^2$ and the total required section for the bottom bars is $A_{s,req_{BOT}} = 3104\,mm^2$. In addition, the required shear reinforcement is $1973\,mm^2/m$.
The concrete's class is C 40/50.

Pell Frischmann

Project/Calc No. A130304A

Sheet No. 2

CALCULATIONS | Project Saint Cross College | Date 23/03/15

Subject RC beam design | by KL | Chkd

Ref. | Output

The considered cover to reinforcement is:

- Underside of beam : 75mm
- Top of beam : 35mm
- Sides of beam : 95mm

• Reinforcement provided

Considering a spacing of the bars approximately between 100-200mm the number of bars of each layer can be (the stirrup's diameter is 10mm):

$$\frac{1900-2\cdot 95-2\cdot 10}{200}+1 \leq \text{bars} \leq \frac{1900-2\cdot 95-2\cdot 10}{100}+1$$

$$\Rightarrow 10 \leq \text{bars} \leq 17$$

- Top reinforcement:

We provide 14 bars of HA16 with a spacing of 130mm for the top reinforcement. Thus the area of the provided reinforcement is:

$$A_{s,prov_{Top}} = 14\cdot 201\,mm^2 = 2814\,mm^2 > 2110\,mm^2 = A_{s,req_{Top}}.$$

- Bottom reinforcement:

We provide 14 bars of HA20 with a spacing of 130 mm for the bottom reinforcement. Thus the area of the provided reinforcement is:

$$A_{s,prov_{BOT}} = 14\cdot 314\,mm^2 = 4396\,mm^2 > 3104\,mm^2 = A_{s,req_{BOT}}$$

Pell Frischmann

Project/Calc No. A13030YAA

Sheet No. 3

CALCULATIONS

Project Saint Cross College

Date 24/03/15

Subject RC beam design

by KL Chkd

Ref.

Output

This is a first estimation of the longitudinal bars, as we have not yet taken into account the effect of the torsion.

-Shear reinforcement:

We provide 10 shear legs of HA8 with a longitudinal spacing of 250mm. Thus we have:

$A_{s,shear,prov} = 2011\ mm^2/m > 1923\ mm^2/m = A_{s,shear,req}$

Pell Frischmann

Project/Calc No. A13030vAA
Sheet No. 4
CALCULATIONS | Project Saint Cross College | Date 23/03/15
Subject RC beam design | by KL | Chkd
Ref. | Output

• Design for torsion.

The maximum applied design torsion is:
$T_{Ed} = 440$ KN·m.

We will follow the design procedure in paragraph 6.3.2. of BS EN 1992-1-1:2004.

$$t_{ef,i} = A/u = \frac{1900 \cdot 600}{2 \cdot 1900 + 2 \cdot 600} = 228 \text{ mm},$$

which is the effective thickness.

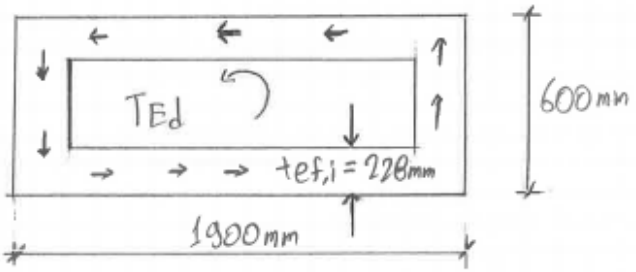

$$A_K = (1900 - 228) \cdot (600 - 228) = 622 \cdot 10^3 \text{ mm}^2$$

The shear stress is equal to:

$$\tau_{t,i} \cdot t_{ef,i} = \frac{T_{Ed}}{2 A_K} = \frac{440 \text{ KN} \cdot \cancel{10^3} \text{ mm}}{2 \cdot 622 \cdot \cancel{10^3} \cdot \text{mm}^2}$$

$$\Rightarrow \tau_{t,i} \cdot t_{ef,i} = 0{,}36 \text{ KN/mm}.$$

Pell Frischmann

Project/Calc No. A130 30 VAA
Sheet No. 5
CALCULATIONS
Project Saint Cross College
Date 23/03/15
Subject RC beam design.
by KL Chkd
Ref.
Output

• Longitudinal reinforcement for torsion ΣA_{sl}

$$\Sigma A_{sl} \cdot f_{yd} = \frac{T_{Ed}}{2A_k} \cdot \cot\theta \cdot U_k$$

where $f_{yd} = 500\,MPa / 1{,}15 = 435\,MPa$

$$\frac{T_{Ed}}{2A_k} = 0{,}36\ kN/mm$$

$$U_k = 2\cdot(1900-220) + 2\cdot(600-220) = 4100\ mm$$

$$\theta = 45^\circ \Rightarrow \cot\theta = 1.$$

Finally $\Sigma A_{sl} = \dfrac{0{,}36\ kN/mm \cdot 1 \cdot 4100\ mm}{435 \cdot 10^{-3}\ kN/mm^2}$

$$\Rightarrow \Sigma A_{sl} = 3\,400\ mm^2$$

Pell Frischmann

Project/Calc No. A1030VAA
Sheet No. 6

CALCULATIONS | Project Saint Cross College | Date 23/03/15

Subject RC beam design | by KL | Chkd

Ref. | Output

• Shear and torsion

The following condition should be satisfied:

$$T_{Ed}/T_{Rd,max} + V_{Ed}/V_{Rd,max} \leq 1,$$

where
- $T_{Ed} = 440$ KNm.
- $V_{Ed} = 930$ KN
- $T_{Rd,max} = 2 \nu \alpha_{cw} f_{cd} A_k t_{ef,i} \sin\theta \cos\theta$
- $V_{Rd,max} = \alpha_{cw} \cdot b_w \cdot z \cdot \nu_1 \cdot f_{cd} / (\cot\theta + \tan\theta)$.

We calculate:

$$\nu = 0{,}6 \cdot \left[1 - \frac{f_{ck}}{250}\right] \overset{C40/50}{=} \left[1 - \frac{40}{250}\right] = 0{,}84$$

$$\nu_1 = \nu \left(1 - \cancel{0{,}5 \cos\alpha}_{0}\right) \Rightarrow \nu_1 = \nu = 0{,}84$$

$\alpha_{cw} = 1$, for non-prestressed structures.

$$T_{Rd,max} = 2 \cdot 0{,}84 \cdot 1 \cdot \frac{40}{1{,}5} \frac{N}{mm^2} \cdot 622 \cdot 10^3 mm^2 \cdot 228 mm \cdot \sin 45^\circ \cos 45^\circ$$

$$\Rightarrow T_{Rd,max} = 3180 \text{ KN} \cdot \text{m}.$$

Pell Frischmann

Project/Calc No. A13030rAA

Sheet No. 7

CALCULATIONS | Project: Saint Cross College | Date: 23/03/15

Subject: RC beam design | by: KL | Chkd:

Ref. | Output

• Shear and torsion

$$z = 0{,}9d = 0{,}9\left(600 - 75 - \frac{24}{2}\right) = 523\,mm,$$

where 600mm is the height of the beam

75 mm is the considered cover to reinforcement in the underside of beam

24/2 is the radius of HA20 bars.

We have that:

$$V_{Rd,max} = \left(1 \cdot 1000\,mm \cdot 523\,mm \cdot 0{,}34 \cdot \frac{40\,\frac{N}{mm^2}}{1{,}5}\right) \Big/ (\cot 45 + \tan 45)$$

$$\Rightarrow V_{Rd,max} = 11.130\ KN$$

Thus, we verify that:

$$T_{Ed}/T_{Rd,max} + V_{Ed}/V_{Rd,max} =$$

$$= \frac{440}{3180} + \frac{930}{11.130} = 0{,}23 < 1.$$

The section's resistance to shear and torsion is not exceeded.

Pell Frischmann

Project/Calc No. A130304AA

Sheet No. 7B

CALCULATIONS | Project Saint Cross College | Date 23/03/15

Subject RC beam design | by KL | Chkd

Ref. | Output

• Additional shear legs to resist torsion

$$\frac{A_{sw}}{s} = \frac{T_{Ed}}{2 \cdot A_k \cdot 0{,}87 f_{yk} \cdot \cot\theta} = \frac{440\,kN \cdot m}{2 \cdot 622 \cdot 10^3\,mm^2\; 0{,}87 \cdot 500 \frac{N}{mm^2} \cdot 1}$$

$\Rightarrow \frac{A_{sw}}{s} = 800\ mm^2/m$ additional reinforcement for the stirrup

We choose a stirrup of H20 @ 250mm and 8 additional shear legs of H8 @ 250mm as a final reinforcement layout. In this way the shear reinforcement is sufficient to resist the superimposed shear and torsional effects.

For the the stirrup:

$A_{s,prov} = 1257\ mm^2/m$.

Pell Frischmann

Project/Calc No. A13030XAA

Sheet No. 8

CALCULATIONS | Project Saint Cross College | Date 23/03/15

Subject RC beam design | by KL | Chkd

Ref. | Output

According to our result the longitudinal reinforcement should be increased by $\Sigma A_{sl} = 3400 mm^2$.

We choose to dispose 2 bars of HA20 on each vertical edge of the section, as the longitudinal reinforcement for torsion should generally be distributed over the length of each side.

The remaining $3400 - 2 \cdot 2 \cdot 314 = 2144 mm^2$ will be added to the top and bottom longitudinal reinforcing bars:

- $2144/2 = 1072 mm^2$ to the top
- $2144/2 = 1072 mm^2$ to the bottom.

Finally, the total section of the required reinforcement (including the reinforcement needed to resist to torsion) is:

- $A_{s,req,TOP} = 2110 + 1072 = 3182 mm^2$
- $A_{s,req,BOT} = 3104 + 1072 = 4176 mm^2$

Pell Frischmann

Project/Calc No. A13030VAA
Sheet No. 9
CALCULATIONS | Project Saint Cross College | Date 23/03/15
Subject RC beam design | by KL | Chkd
Ref. | Output

- Bottom reinforcement:

The reinforcement provided in the beginning is still sufficient for our needs in torsion as:

$A_{s,prov,BOT} = 4396 mm^2 > A_{s,req,BOT} = 4176 mm^2$

- Top reinforcement:

We use the same reinforcement as at the bottom by providing 15 bars of HA20 with a spacing of 130 mm. Thus the area of the provided reinforcement is:

$A_{s,prov,Top} = 4396 mm^2 > A_{s,req,Top} = 3182 mm^2$

The shear reinforcement remains the same.

The details of the longitudinal reinforcement are presented at sheet number 10.

In the RC detailing the nominal cover to side reinforcement will finally be $c_{nom,s} = 83mm$. This is explained by the fact that we now take into consideration the radius of the HA20 bars, which is equal to 12mm.

The detailed section of the beam with its reinforcement is now presented.

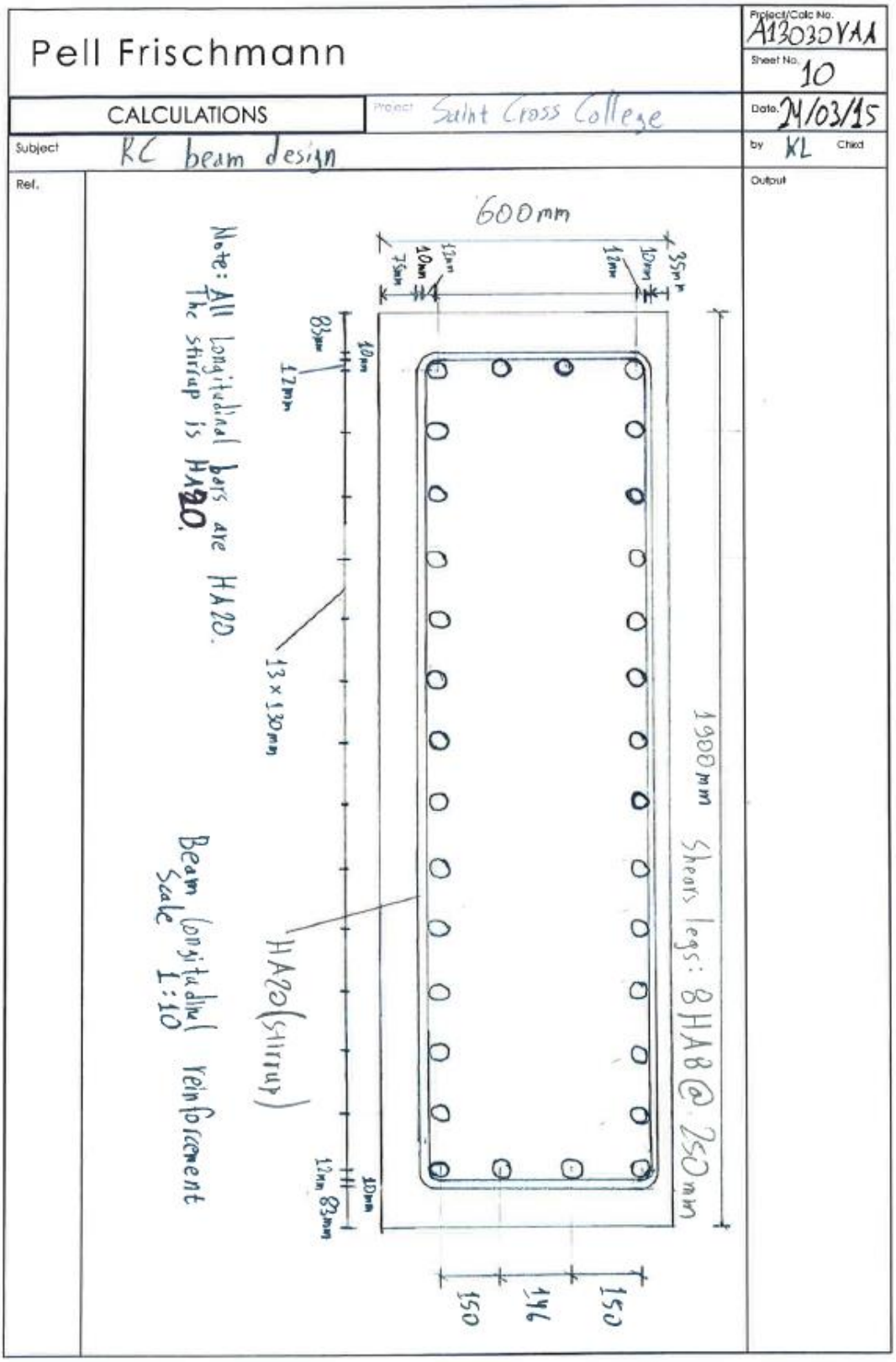

The Tedds software calculations are now presented.

Tedds	Project: Saint Cross College			Job no.: A13030AA	
	Calcs for: RC beam design			Start page no./Revision: 1	
	Calcs by: K	Calcs date: 23/03/2015	Checked by	Checked date	Approved by	Approved date

RC BEAM DESIGN (EN1992-1)

Bottom bars and shear reinforcement (for beam without torsion).

In accordance with UK national annex

TEDDS calculation version 2.1.15

Rectangular section details

Section width	b = **1900** mm
Section depth	h = **600** mm

Concrete details (Table 3.1 - Strength and deformation characteristics for concrete)

Concrete strength class	**C40/50**
Characteristic compressive cylinder strength	f_{ck} = **40** N/mm²
Characteristic compressive cube strength	$f_{ck,cube}$ = **50** N/mm²
Mean value of compressive cylinder strength	$f_{cm} = f_{ck} + 8$ N/mm² = **48** N/mm²
Mean value of axial tensile strength	$f_{ctm} = 0.3$ N/mm² $\times (f_{ck}/1$ N/mm²$)^{2/3}$ = **3.5** N/mm²
Secant modulus of elasticity of concrete	$E_{cm} = 22$ kN/mm² $\times [f_{cm}/10$ N/mm²$]^{0.3}$ = **35220** N/mm²
Partial factor for concrete (Table 2.1N)	γ_C = **1.50**
Compressive strength coefficient (cl.3.1.6(1))	α_{cc} = **0.85**
Design compressive concrete strength (exp.3.15)	$f_{cd} = \alpha_{cc} \times f_{ck} / \gamma_C$ = **22.7** N/mm²
Maximum aggregate size	h_{agg} = **20** mm

Reinforcement details

Characteristic yield strength of reinforcement	f_{yk} = **500** N/mm²
Partial factor for reinforcing steel (Table 2.1N)	γ_S = **1.15**
Design yield strength of reinforcement	$f_{yd} = f_{yk} / \gamma_S$ = **435** N/mm²

Nominal cover to reinforcement

Nominal cover to top reinforcement	c_{nom_t} = **35** mm
Nominal cover to bottom reinforcement	c_{nom_b} = **75** mm
Nominal cover to side reinforcement	c_{nom_s} = **95** mm

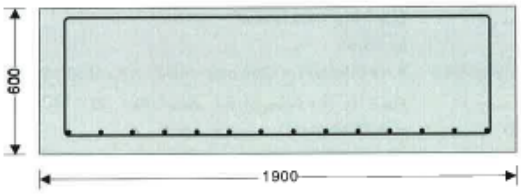

10 x 8ϕ shear legs at 250 c/c

14 x 20ϕ bars

Rectangular section in flexure (Section 6.1) - Positive midspan moment

Design bending moment	M = **650** kNm
Depth to tension reinforcement	$d = h - c_{nom\_b} - \phi_v - \phi_{bot} / 2$ = **507** mm
Percentage redistribution	m_r = **0** %
Redistribution ratio	$\delta = \min(1 - m_r, 1)$ = **1.000**
	$K = M / (b \times d^2 \times f_{ck})$ = **0.033**
	$K' = 0.598 \times \delta - 0.181 \times \delta^2 - 0.21$ = **0.207**
	K' > K - No compression reinforcement is required
Lever arm	$z = \min((d / 2) \times [1 + (1 - 3.53 \times K)^{0.5}], 0.95 \times d)$ = **482** mm
Depth of neutral axis	$x = 2.5 \times (d - z)$ = **63** mm

Tedds	Project: Saint Cross College				Job no.: A13030VAA	
	Calcs for: RC beam design				Start page no./Revision: 3	
	Calcs by: K	Calcs date: 23/03/2015	Checked by	Checked date	Approved by	Approved date

Minimum allowable bottom bar spacing	$s_{bar\_bot,min} = \max(\phi_{bot}, h_{agg} + 5\text{ mm}, 20\text{ mm}) + \phi_{bot} = \mathbf{45}$ mm
Minimum top bar spacing	$s_{top,min} = (b - 2 \times c_{nom\_s} - 2 \times \phi_v - \phi_{top}) / (N_{top} - 1) = \mathbf{-1682}$ mm
Minimum allowable top bar spacing	$s_{bar\_top,min} = \max(\phi_{top}, h_{agg} + 5\text{ mm}, 20\text{ mm}) + \phi_{top} = \mathbf{37}$ mm

~~FAIL~~ - Minimum allowable bar spacing exceeds top bar spacing

PASS. These calculations do not concern top bars.

Tedds	Project: Saint Cross College				Job no.: A13030rAA
	Calcs for: RC beam design				Start page no./Revision: 1
	Calcs by: K	Calcs date: 23/03/2015	Checked by	Checked date	Approved by / Approved date

RC BEAM DESIGN (EN1992-1)

Top bars and shear reinforcement (for beam without torsion)

In accordance with UK national annex

TEDDS calculation version 2.1.15

Rectangular section details

Section width	b = **1900** mm
Section depth	h = **600** mm

Concrete details (Table 3.1 - Strength and deformation characteristics for concrete)

Concrete strength class	**C40/50**
Characteristic compressive cylinder strength	f_{ck} = **40** N/mm²
Characteristic compressive cube strength	$f_{ck,cube}$ = **50** N/mm²
Mean value of compressive cylinder strength	$f_{cm} = f_{ck} + 8$ N/mm² = **48** N/mm²
Mean value of axial tensile strength	$f_{ctm} = 0.3$ N/mm² × $(f_{ck}/1$ N/mm²$)^{2/3}$ = **3.5** N/mm²
Secant modulus of elasticity of concrete	$E_{cm} = 22$ kN/mm² × $[f_{cm}/10$ N/mm²$]^{0.3}$ = **35220** N/mm²
Partial factor for concrete (Table 2.1N)	γ_C = **1.50**
Compressive strength coefficient (cl.3.1.6(1))	α_{cc} = **0.85**
Design compressive concrete strength (exp.3.15)	$f_{cd} = \alpha_{cc} \times f_{ck} / \gamma_C$ = **22.7** N/mm²
Maximum aggregate size	h_{agg} = **20** mm

Reinforcement details

Characteristic yield strength of reinforcement	f_{yk} = **500** N/mm²
Partial factor for reinforcing steel (Table 2.1N)	γ_S = **1.15**
Design yield strength of reinforcement	$f_{yd} = f_{yk} / \gamma_S$ = **435** N/mm²

Nominal cover to reinforcement

Nominal cover to top reinforcement	c_{nom_t} = **35** mm
Nominal cover to bottom reinforcement	c_{nom_b} = **75** mm
Nominal cover to side reinforcement	c_{nom_s} = **95** mm

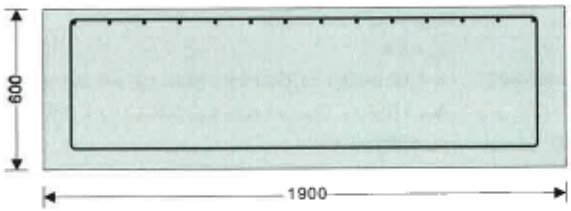

14 x 16ϕ bars

10 x 8ϕ shear legs at 250 c/c

Rectangular section in flexure (Section 6.1) - Negative span moment

Design bending moment	M = **350** kNm
Depth to tension reinforcement	$d = h - c_{nom\_t} - \phi_v - \phi_{top} / 2$ = **549** mm
Percentage redistribution	m_r = **0** %
Redistribution ratio	$\delta = \min(1 - m_r, 1)$ = **1.000**
	$K = M / (b \times d^2 \times f_{ck})$ = **0.015**
	$K' = 0.598 \times \delta - 0.181 \times \delta^2 - 0.21$ = **0.207**
	K' > K - No compression reinforcement is required
Lever arm	$z = \min((d / 2) \times [1 + (1 - 3.53 \times K)^{0.5}], 0.95 \times d)$ = **522** mm
Depth of neutral axis	$x = 2.5 \times (d - z)$ = **69** mm

Tedds	Project: Saint Cross College				Job no.: A13030VAA	
	Calcs for: RC beam design				Start page no./Revision: 3	
	Calcs by: K	Calcs date: 23/03/2015	Checked by	Checked date	Approved by	Approved date

Minimum allowable bottom bar spacing	$s_{bar\_bot,min} = \max(\phi_{bot}, h_{agg} + 5\text{ mm}, 20\text{ mm}) + \phi_{bot} = \mathbf{50}$ mm
Minimum top bar spacing	$s_{top,min} = (b - 2 \times c_{nom\_s} - 2 \times \phi_v - \phi_{top}) / (N_{top} - 1) = \mathbf{129}$ mm
Minimum allowable top bar spacing	$s_{bar\_top,min} = \max(\phi_{top}, h_{agg} + 5\text{ mm}, 20\text{ mm}) + \phi_{top} = \mathbf{41}$ mm

FAIL - Minimum allowable bar spacing exceeds bottom bar spacing

PASS - These calculations do not concern bottom bars.

APPENDIX B: PLANS AND SECTIONS OF SAINT CROSS COLLEGE

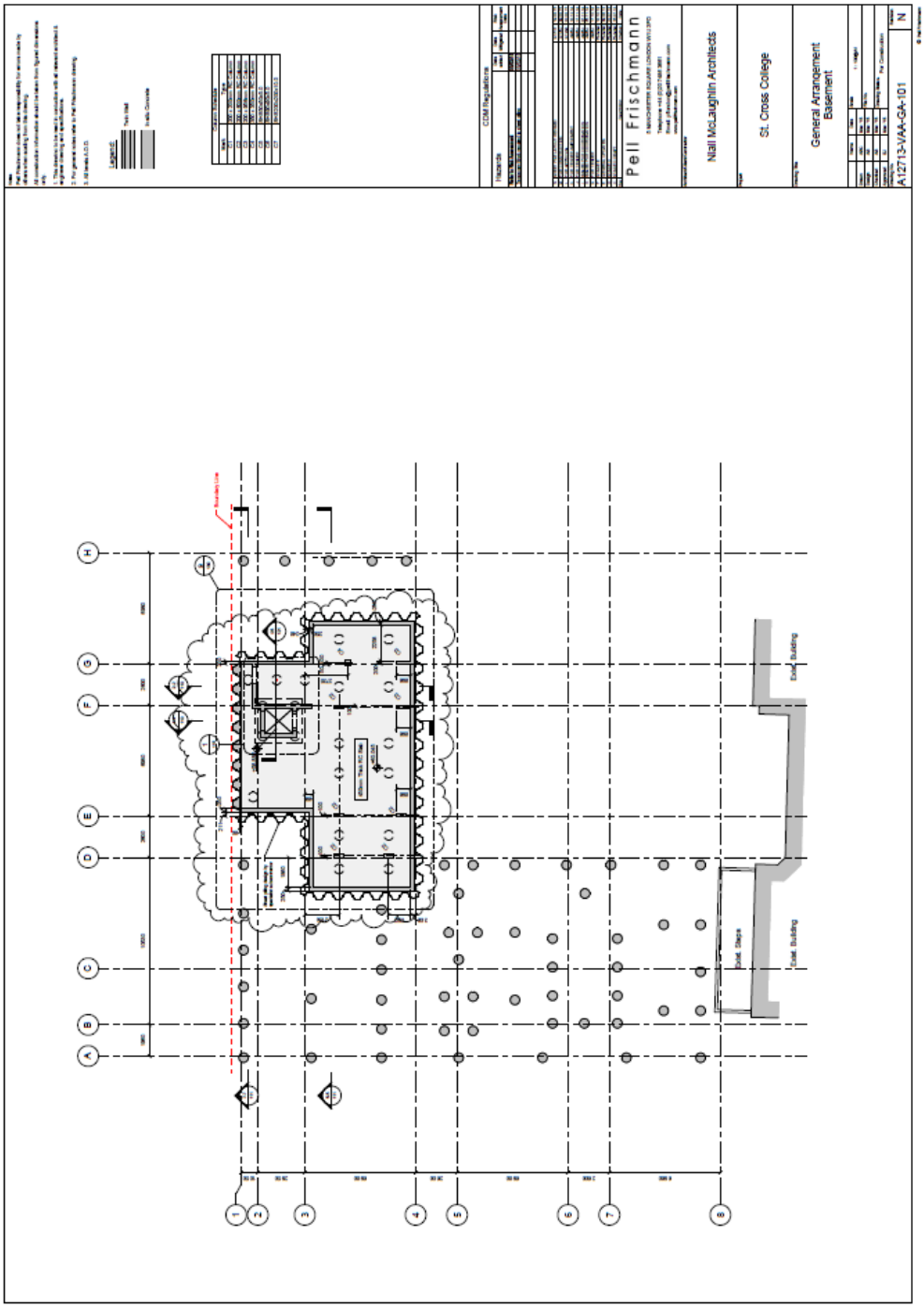

Figure 59, Saint Cross College plan, Basement

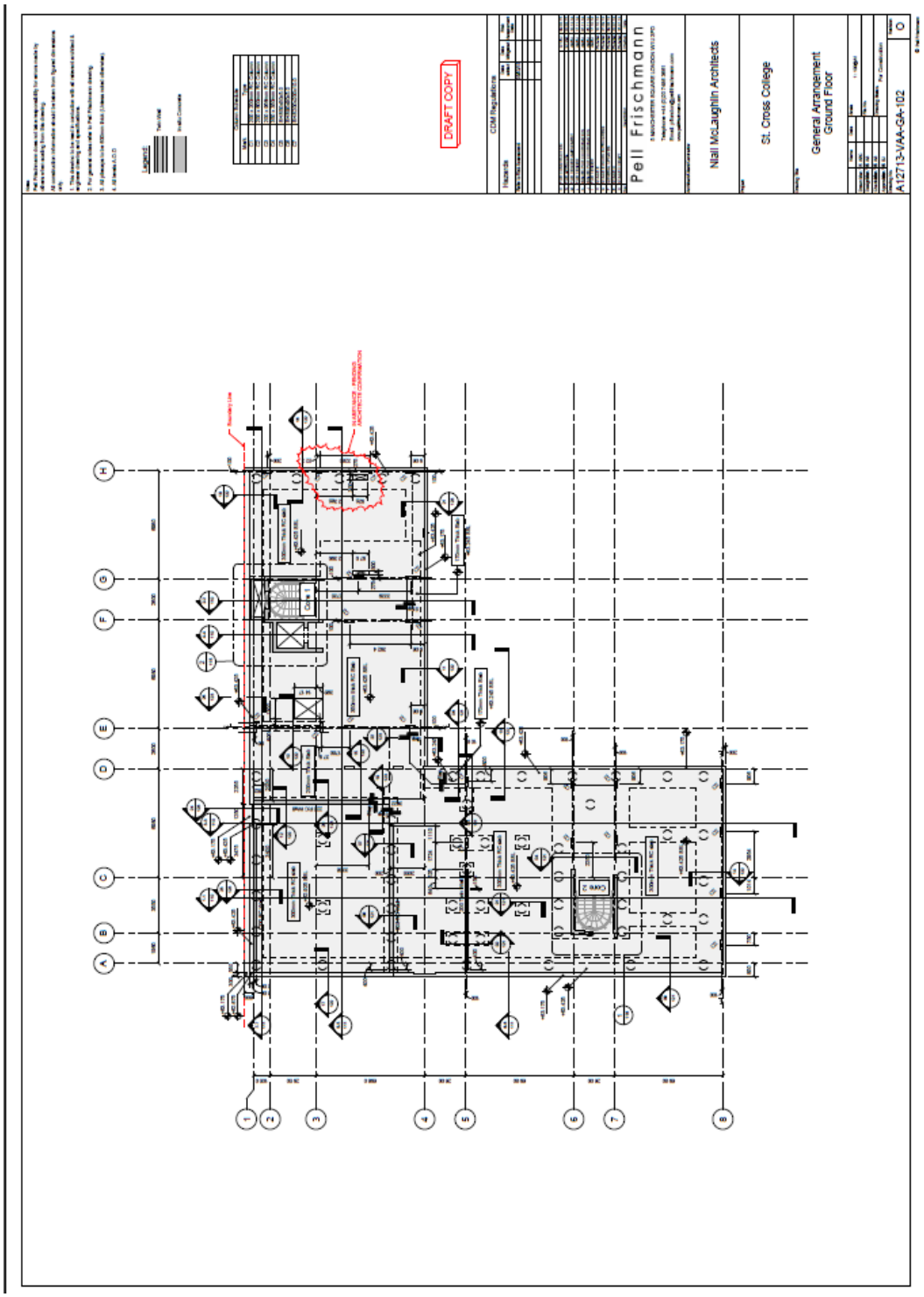

Figure 60, Saint Cross College plan, Ground floor

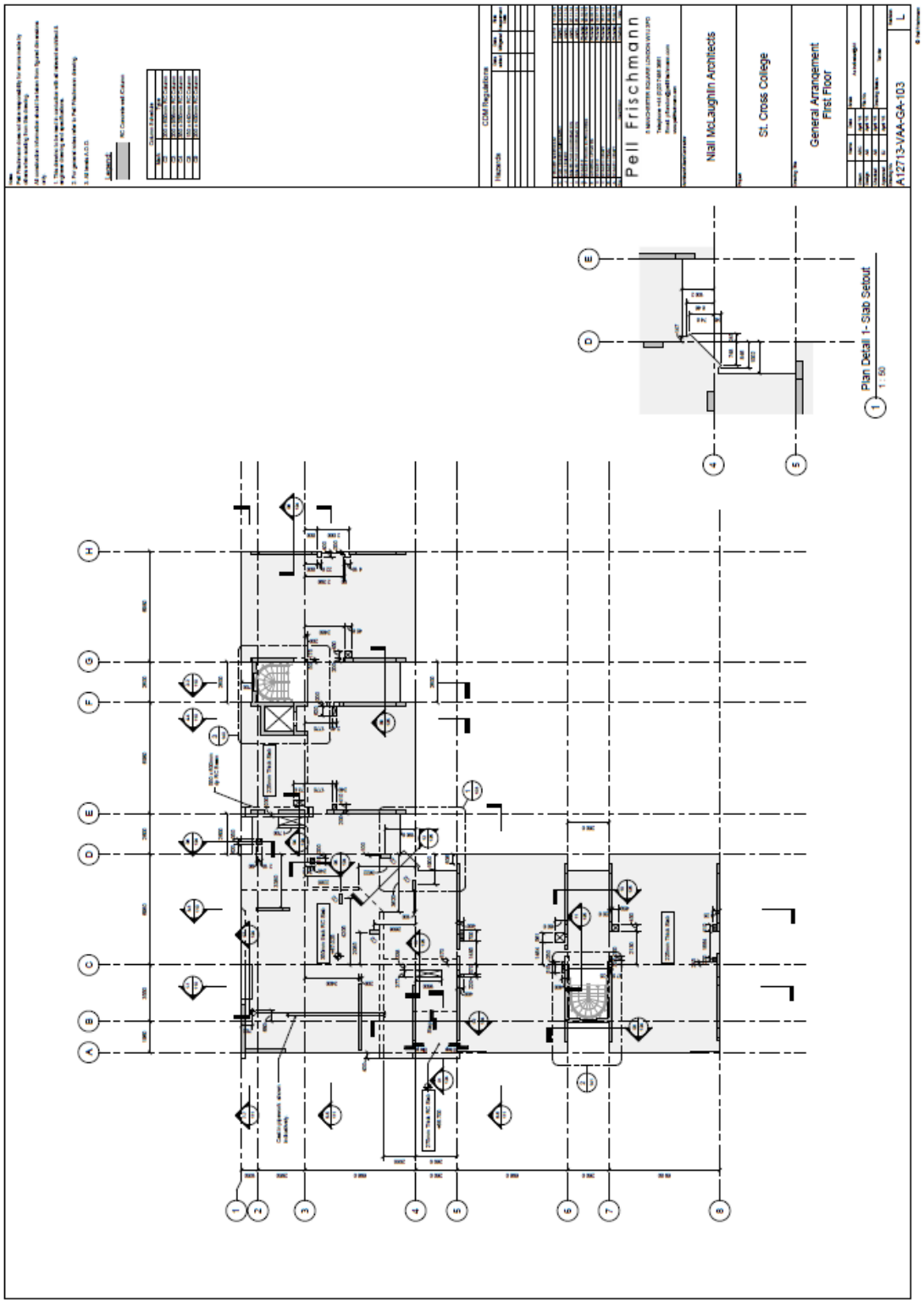

Figure 61, Saint Cross College plan, First floor

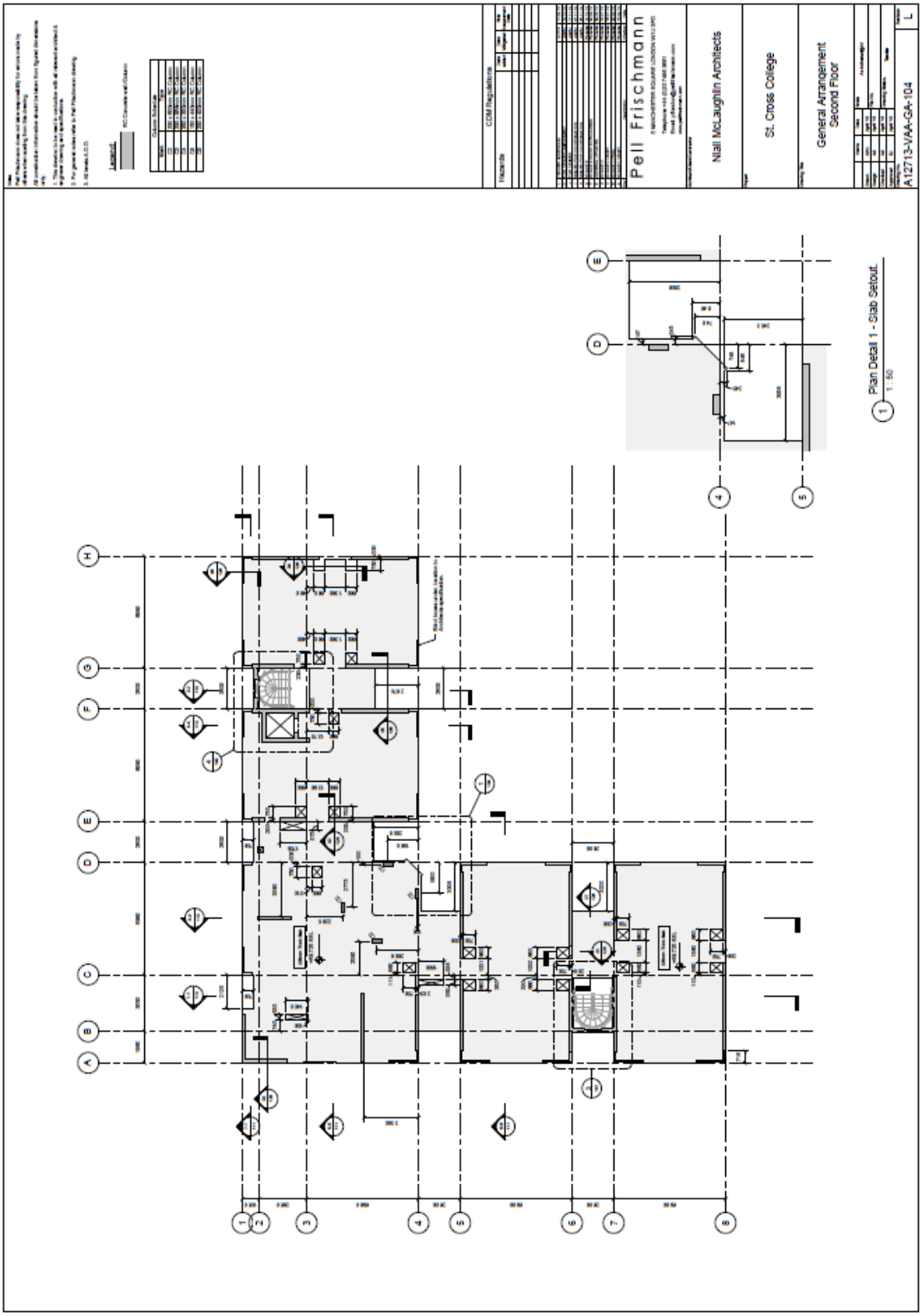

Figure 62, Saint Cross College plan, Second floor

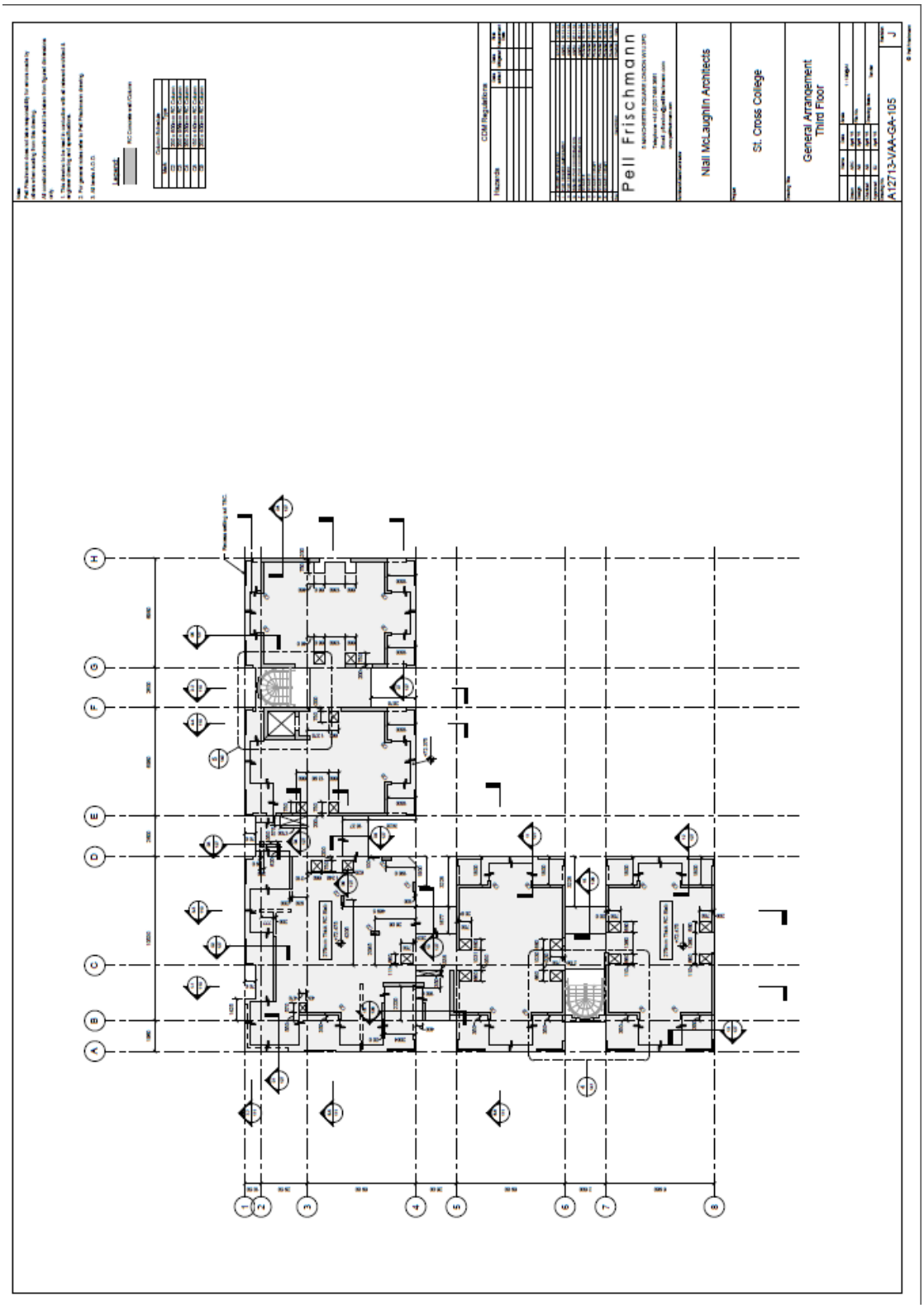

Figure 63, Saint Cross College plan, Third floor

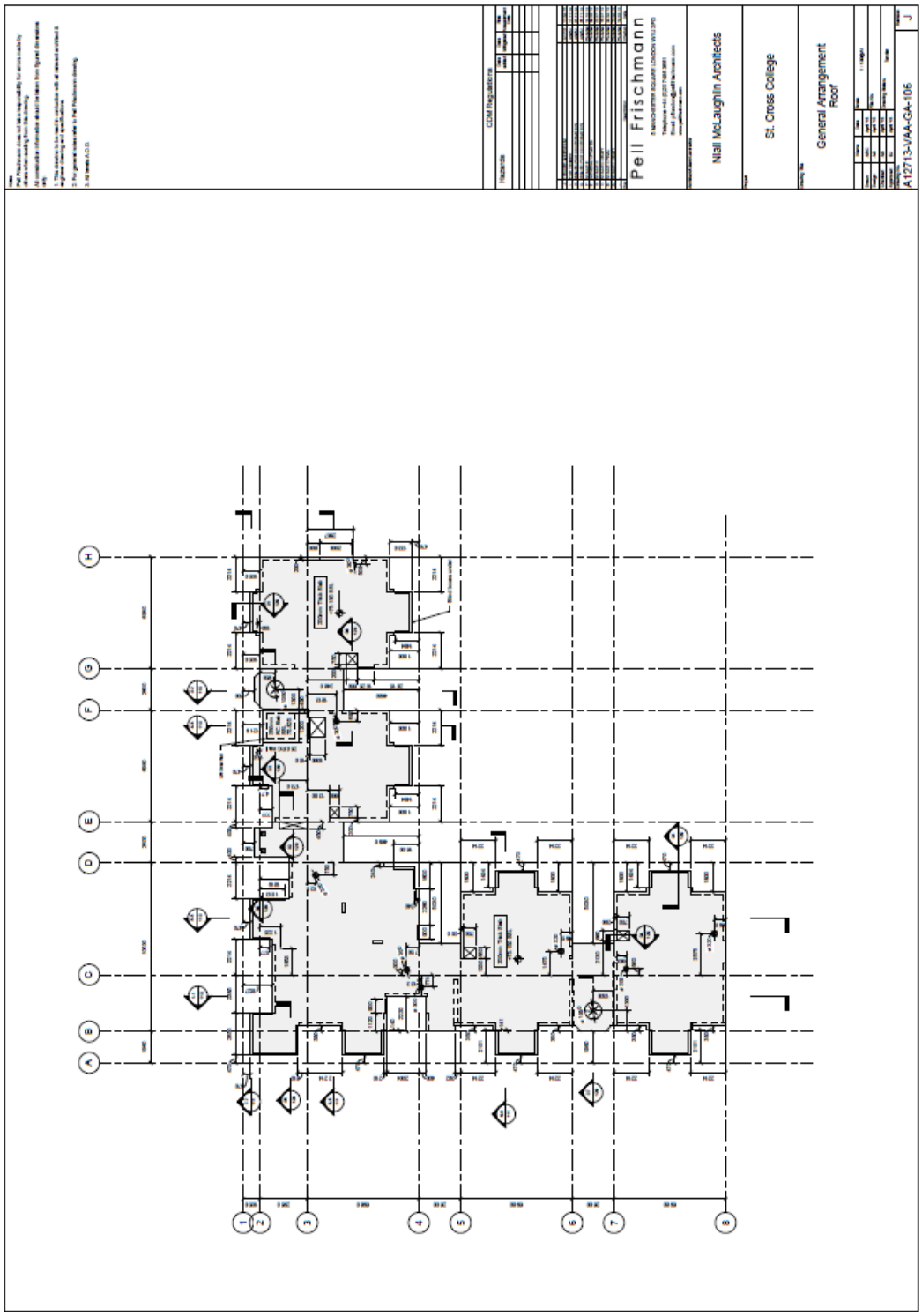

Figure 64, Saint Cross College plan, Roof

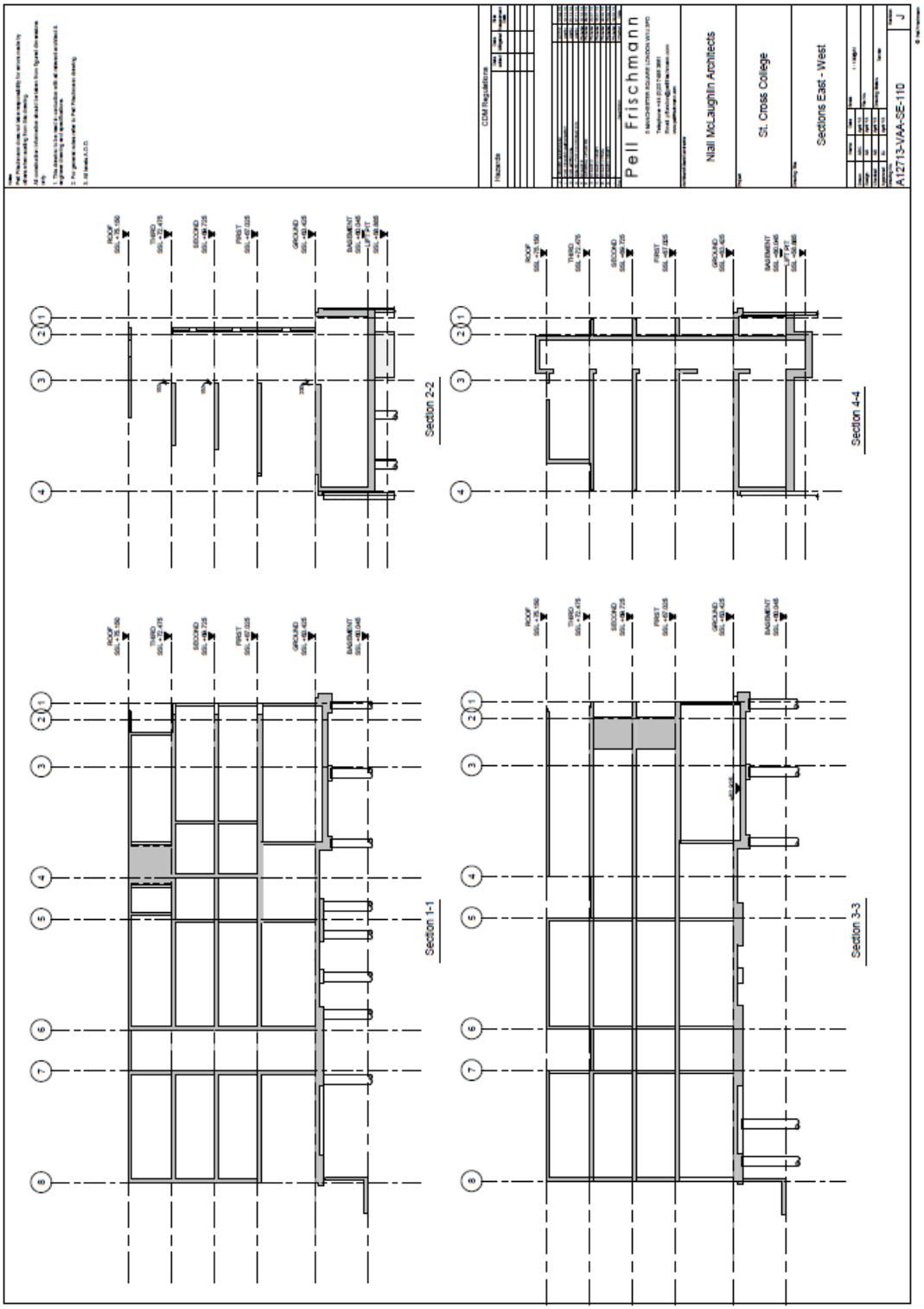

Figure 65, Saint Cross College section

APPENDIX C :ULS OUTPUT OF SCIA ENGINEER

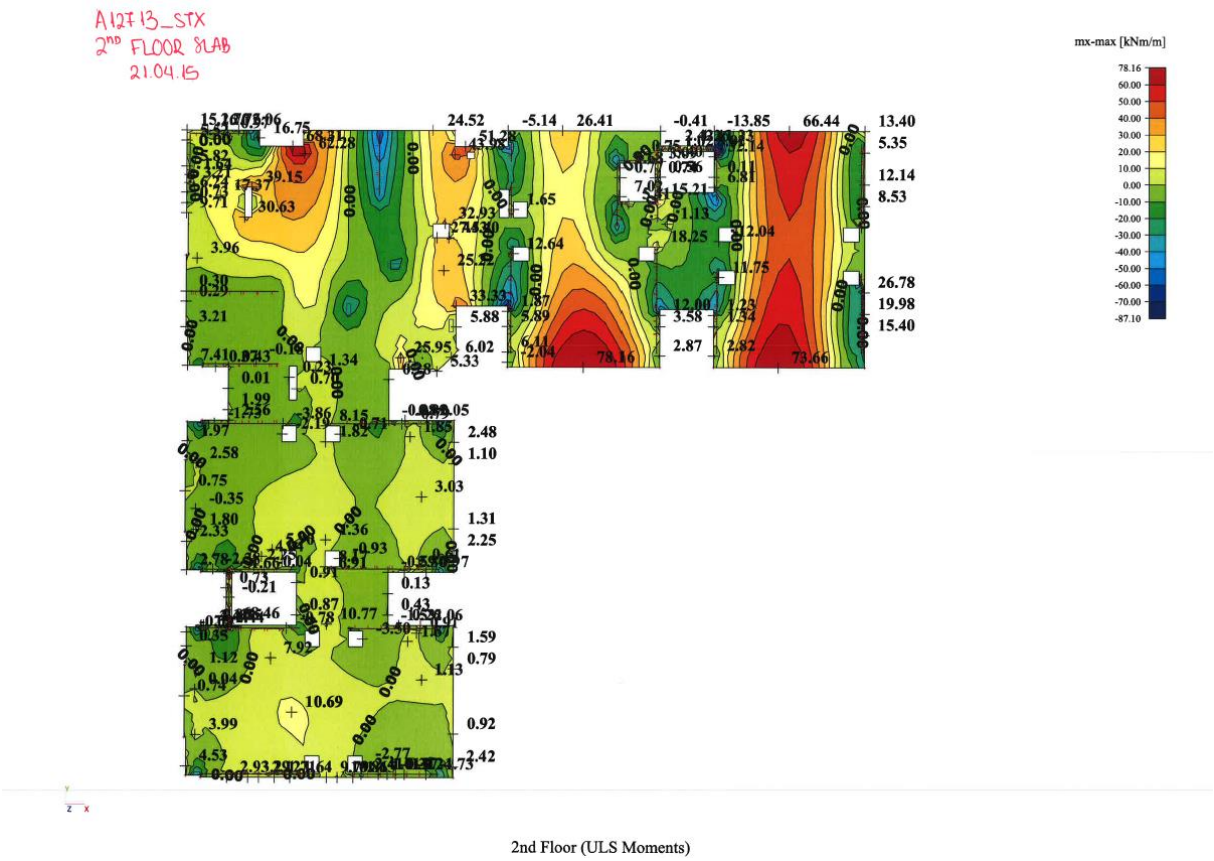

Figure 66, ULS output of Scia engineer fot the second floor slab (direction x)

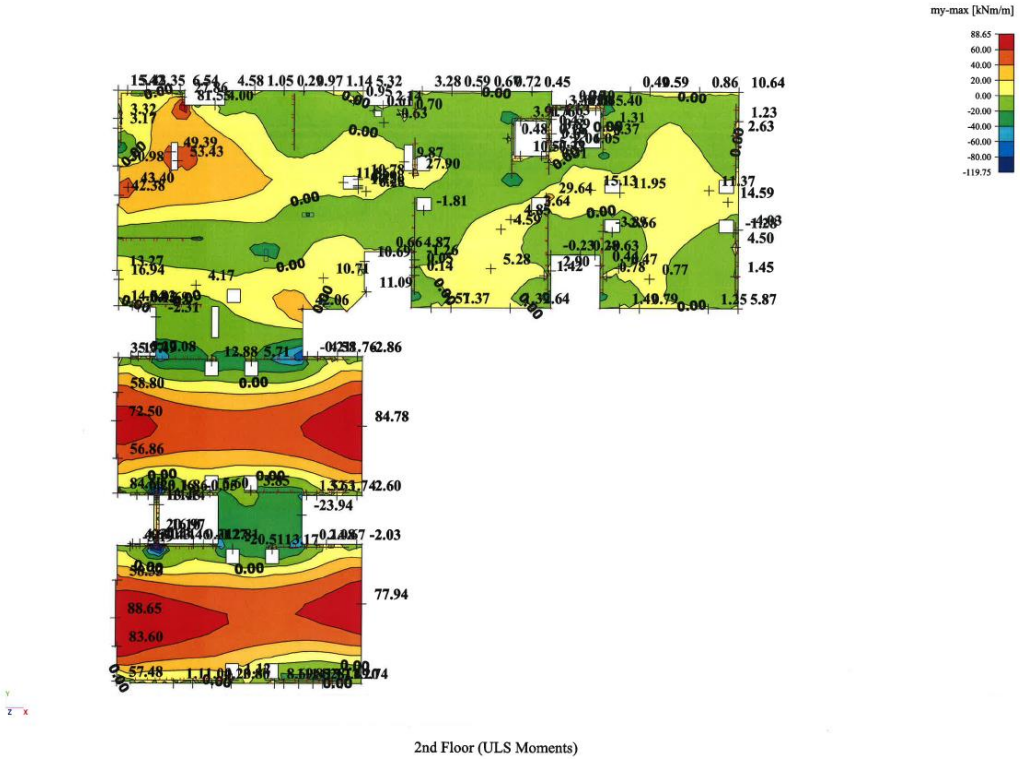

Figure 67, ULS output of Scia engineer fot the second floor slab (direction y)

Figure 68, ULS output of Scia engineer fot the third floor slab (direction x)

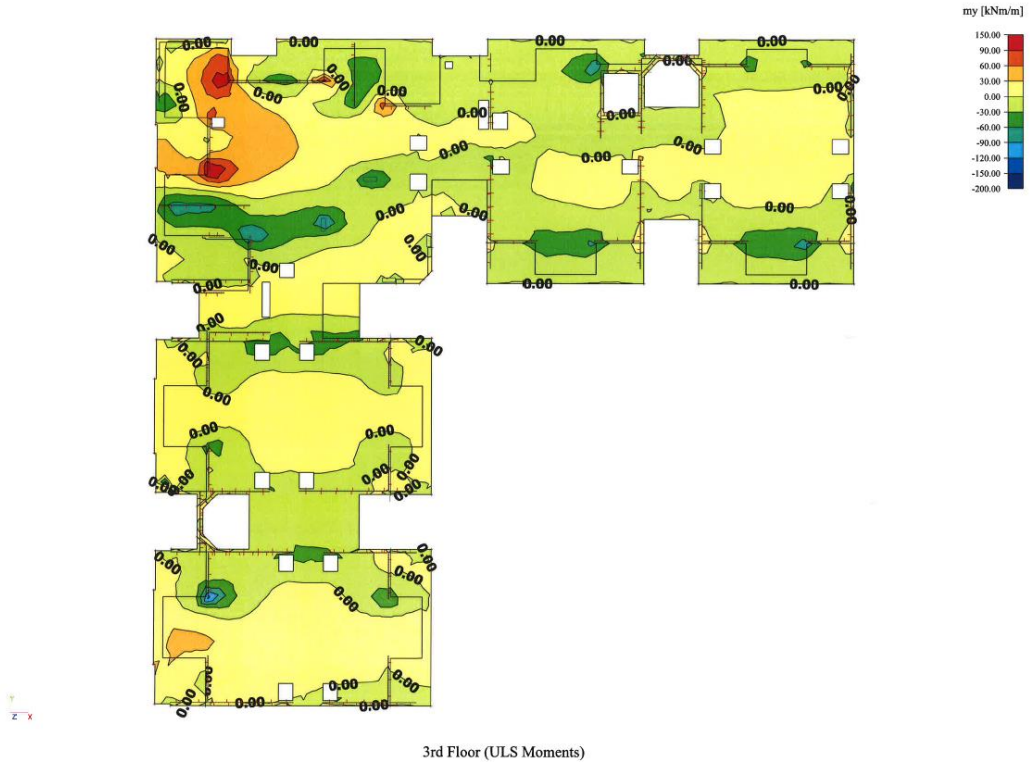

Figure 69, ULS output of Scia engineer fot the third floor slab (direction y)

APPENDIX D: SAMPLE CALCULATION OF THE LONGITUDINAL REINFORCEMENT OF THE FIRST FLOOR SLAB ACCORDING TO EUROCODE 2 IN TEDDS SOFTWARE

Tedds	Project				Job no.	
	Calcs for				Start page no./Revision 1	
	Calcs by K	Calcs date 05/05/2015	Checked by	Checked date	Approved by	Approved date

RC BEAM DESIGN (EN1992-1)

In accordance with UK national annex

TEDDS calculation version 2.1.15

Rectangular section details

Section width	$b = 1000$ mm
Section depth	$h = 225$ mm

Concrete details (Table 3.1 - Strength and deformation characteristics for concrete)

Concrete strength class	C40/50
Characteristic compressive cylinder strength	$f_{ck} = 40$ N/mm²
Characteristic compressive cube strength	$f_{ck,cube} = 50$ N/mm²
Mean value of compressive cylinder strength	$f_{cm} = f_{ck} + 8$ N/mm² $= 48$ N/mm²
Mean value of axial tensile strength	$f_{ctm} = 0.3$ N/mm² $\times (f_{ck}/1$ N/mm²$)^{2/3} = 3.5$ N/mm²
Secant modulus of elasticity of concrete	$E_{cm} = 22$ kN/mm² $\times [f_{cm}/10$ N/mm²$]^{0.3} = 35220$ N/mm²
Partial factor for concrete (Table 2.1N)	$\gamma_C = 1.50$
Compressive strength coefficient (cl.3.1.6(1))	$\alpha_{cc} = 0.85$
Design compressive concrete strength (exp.3.15)	$f_{cd} = \alpha_{cc} \times f_{ck} / \gamma_C = 22.7$ N/mm²
Maximum aggregate size	$h_{agg} = 20$ mm

Reinforcement details

Characteristic yield strength of reinforcement	$f_{yk} = 500$ N/mm²
Partial factor for reinforcing steel (Table 2.1N)	$\gamma_S = 1.15$
Design yield strength of reinforcement	$f_{yd} = f_{yk} / \gamma_S = 435$ N/mm²

Nominal cover to reinforcement

Nominal cover to top reinforcement	$c_{nom\_t} = 35$ mm
Nominal cover to bottom reinforcement	$c_{nom\_b} = 35$ mm
Nominal cover to side reinforcement	$c_{nom\_s} = 35$ mm

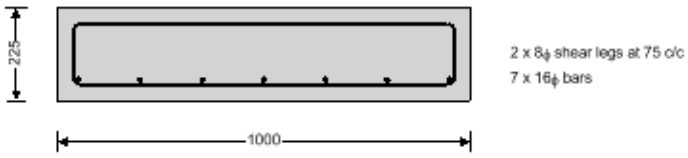

Rectangular section in flexure (Section 6.1) - Positive midspan moment

Design bending moment	$M = 90$ kNm
Depth to tension reinforcement	$d = h - c_{nom\_b} - \phi_v - \phi_{bar}/2 = 174$ mm
Percentage redistribution	$m_r = 0$ %
Redistribution ratio	$\delta = \min(1 - m_r, 1) = 1.000$
	$K = M / (b \times d^2 \times f_{ck}) = 0.074$
	$K' = 0.598 \times \delta - 0.181 \times \delta^2 - 0.21 = 0.207$
	K' > K - No compression reinforcement is required
Lever arm	$z = \min((d/2) \times [1 + (1 - 3.53 \times K)^{0.5}], 0.95 \times d) = 162$ mm
Depth of neutral axis	$x = 2.5 \times (d - z) = 31$ mm
Area of tension reinforcement required	$A_{s,req} = M / (f_{yd} \times z) = 1280$ mm²

Figure 70, Tedds sample calculation page 1

Tedds	Project				Job no.	
	Calcs for				Start page no./Revision 2	
	Calcs by K	Calcs date 05/05/2015	Checked by	Checked date	Approved by	Approved date

Tension reinforcement provided	$7 \times 16\phi$ bars
Area of tension reinforcement provided	$A_{s,prov} = 1407$ mm²
Minimum area of reinforcement (exp.9.1N)	$A_{s,min} = \max(0.26 \times f_{ctm} / f_{yk}, 0.0013) \times b \times d = 317$ mm²
Maximum area of reinforcement (cl.9.2.1.1(3))	$A_{s,max} = 0.04 \times b \times h = 9000$ mm²

PASS - Area of reinforcement provided is greater than area of reinforcement required

Rectangular section in shear (Section 6.2)

Design shear force at span s1	$V_{Ed,max} = \text{abs}(\max(V_{s1\_max}, V_{s1\_neg})) = 0$ kN
Angle of comp. shear strut for maximum shear	$\theta_{max} = 45$ deg
Maximum design shear force (exp.6.9)	$V_{Rd,max} = b \times z \times v_1 \times f_{cd} / (\cot(\theta_{max}) + \tan(\theta_{max})) = 924$ kN

PASS - Design shear force at support is less than maximum design shear force

Design shear force	$V_{Ed} = 0$ kN
Design shear stress	$v_{Ed} = V_{Ed} / (b \times z) = 0.000$ N/mm²
Strength reduction factor (cl.6.2.3(3))	$v_1 = 0.6 \times [1 - f_{ck} / 250 \text{ N/mm}^2] = 0.504$
Compression chord coefficient (cl.6.2.3(3))	$\alpha_{cw} = 1.00$
Angle of concrete compression strut (cl.6.2.3)	

$\theta = \min(\max(0.5 \times \text{Asin}[\min(2 \times v_{Ed} / (\alpha_{cw} \times f_{cd} \times v_1), 1)], 21.8 \text{ deg}), 45\text{deg}) = 21.8$ deg

Area of shear reinforcement required (exp.6.13)	$A_{sv,req} = v_{Ed} \times b / (f_{yd} \times \cot(\theta)) = 0$ mm²/m
Shear reinforcement provided	$2 \times 8\phi$ legs at 75 c/c
Area of shear reinforcement provided	$A_{sv,prov} = 1340$ mm²/m
Minimum area of shear reinforcement (exp.9.5N)	$A_{sv,min} = 0.08 \text{ N/mm}^2 \times b \times (f_{ck} / 1 \text{ N/mm}^2)^{0.5} / f_{yk} = 1012$ mm²/m

PASS - Area of shear reinforcement provided exceeds minimum required

Maximum longitudinal spacing (exp.9.6N)	$s_{vl,max} = 0.75 \times d = 131$ mm

PASS - Longitudinal spacing of shear reinforcement provided is less than maximum

Crack control (Section 7.3)

Maximum crack width	$w_k = 0.3$ mm
Design value modulus of elasticity reinf (3.2.7(4))	$E_s = 200000$ N/mm²
Mean value of concrete tensile strength	$f_{ct,eff} = f_{ctm} = 3.5$ N/mm²
Stress distribution coefficient	$k_c = 0.4$
Non-uniform self-equilibrating stress coefficient	$k = \min(\max(1 + (300 \text{ mm} - \min(h, b)) \times 0.35 / 500 \text{ mm}, 0.65), 1) = 1.00$
Actual tension bar spacing	$s_{bar} = (b - 2 \times (c_{nom\_s} + \phi_v) - \phi_{bot}) / (N_{bar} - 1) = 150$ mm
Maximum stress permitted (Table 7.3N)	$\sigma_s = 280$ N/mm²
Concrete to steel modulus of elast. ratio	$\alpha_{cr} = E_s / E_{cm} = 5.68$
Distance of the Elastic NA from bottom of beam	$y = (b \times h^2 / 2 + A_{s,prov} \times (\alpha_{cr} - 1) \times (h - d)) / (b \times h + A_{s,prov} \times (\alpha_{cr} - 1)) = 111$ mm
Area of concrete in the tensile zone	$A_{ct} = b \times y = 110751$ mm²
Minimum area of reinforcement required (exp.7.1)	$A_{s,c,min} = k_c \times k \times f_{ct,eff} \times A_{ct} / \sigma_s = 555$ mm²

PASS - Area of tension reinforcement provided exceeds minimum required for crack control

Quasi-permanent limit state moment	$M_{QP} = 40$ kNm
Permanent load ratio	$R_{QL} = M_{QP} / M = 0.44$
Service stress in reinforcement	$\sigma_{sr} = f_{yd} \times A_{s,req} / A_{s,prov} \times R_{QL} = 176$ N/mm²
Maximum bar spacing (Tables 7.3N)	$s_{bar,max} = 250$ mm

PASS - Maximum bar spacing exceeds actual bar spacing for crack control

Minimum bar spacing

Minimum bottom bar spacing	$s_{bot,min} = (b - 2 \times c_{nom\_s} - 2 \times \phi_v - \phi_{bot}) / (N_{bot} - 1) = 150$ mm
Minimum allowable bottom bar spacing	$s_{bar\_botmin} = \max(\phi_{bot}, h_{agg} + 5 \text{ mm}, 20 \text{ mm}) + \phi_{bot} = 41$ mm

Figure 71, Tedds sample calculation page 2

APPENDIX E: PUNCHING SHEAR CALCULATIONS FOR COLUMNS C3-02, C3-03, C3-04 OF THE FIRST FLOOR SLAB

Project	4- First Floor Columns Punching	The Concrete Centre		
Client	Advisory Group	Made by	Date	Page
Location	C3-02	KL	05-May-2015	
	PUNCHING SHEAR to BS EN 1992-1: 2004 INTERNAL	Checked	Revision	Job No
	Originated from TCC13.xlsm v4.9 on CD © 2003-15 TCC COLUMN		-	A12713

MATERIALS f_{ck} N/mm² 40 **STATUS** *VALID DESIGN*
f_{yk} N/mm² 500
Steel class B

LEGEND

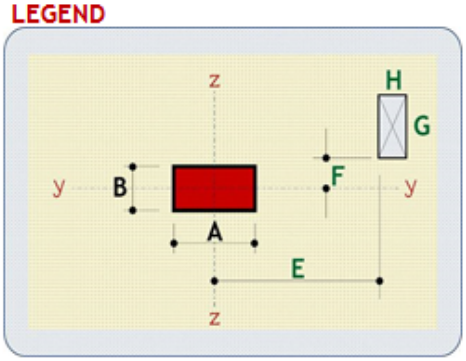

DIMENSIONS

A	mm	200	E	mm	0
B	mm	600	F	mm	0
G	mm	0	H	mm	0

LOADING V_{Ed} kN 785
ult UDL kN/m² 0.00
ß = 1.150 braced structure, adjacent spans d

SLAB

			dz	mm	298	Asz	mm²/m	754	in B + 6d	px = 0.253
h	mm	350	dy	mm	284	Asy	mm²/m	0	in A + 6d	py = 0.000
			d	mm	291				100ρL % =	0.000

RESULTS βV_{Ed} = 902.8 kN $v_{Rd,c}$ = 0.5476 N/mm² *Equation (6.47)*
At col. face, vEd = 1.939 N/mm² At 2d perimeter, $v_{Ed,red}$ = 0.5901 N/mm²
Uout required = 5666 (≈ See Fig 6.22B) *Equation (6.54)*

SOLUTION *Fig 6.22 (B)*
12 link spurs of 3B8 @ 215 *36 links*

St (average) = 260 mm Sr = 215 mm
Asw/Sr req = 1.949 *(6.52) & (9.11)*
Asw/Sr prov = 2.806 mm
First link perimeter 145 mm from column face
Outer links at 575 mm from column face
Uout = 7151 mm > 5,666 mm

SPUR PLAN

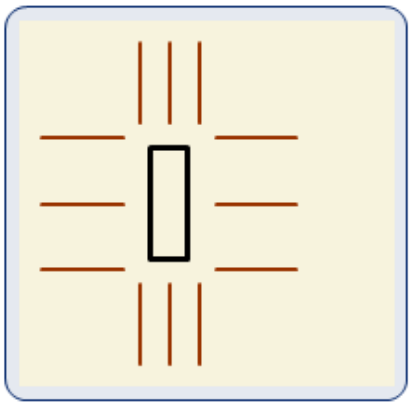

See GEOMETRY page for link locations.
Some links shown may need to be re-located to avoid holes.

Figure 72, Punching shear verification for column C3-02

Project	4- First Floor Columns Punching	The Concrete Centre			
Client	Advisory Group	Made by	Date	Page	
Location	C3-03	KL	05-May-2015		
	PUNCHING SHEAR to BS EN 1992-1: 2004	RE-ENTRANT	Revision	Job No	
	Originated from TCC13.xlsm v4.9 on CD © 2003-15 TCC	COLUMN	0	-	A12713

MATERIALS fck N/mm² 40 — fyk N/mm² 500 — Steel class B

STATUS *VALID DESIGN*

LEGEND

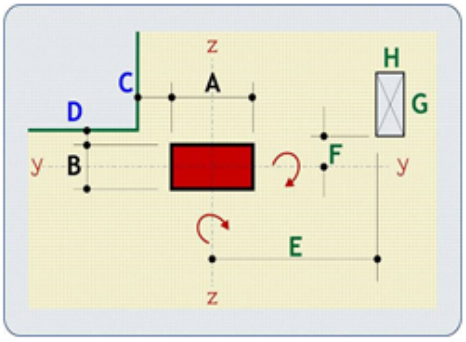

DIMENSIONS

A	mm	200	E	mm	0
B	mm	600	F	mm	0
C	mm	600	G	mm	0
D	mm	150	H	mm	0

LOADING V_{Ed} kN 285.0

ult UDL kN/m² 0.00

ß = 1.275 braced structure, adjacent spans differ no more than 25%

SLAB

			dz	mm	170.5	Asz	mm²/m	1340	in B + 6d	px = 0.786
h	mm	225	dy	mm	151.5	Asy	mm²/m	1340	in A + 6d	py = 0.884
			d	mm	161				100ρL % =	0.834

RESULTS βV_{Ed} = 363.4 kN — $v_{Rd,c}$ = 0.7725 N/mm² *Equation (6.47)*

At col. face, vEd = 1.411 N/mm² — At 2d perimeter, $v_{Ed,red}$ = 0.6229 N/mm²

Uout required = 1600 (≈ See Fig 6.22B) *Equation (6.54)*

No links required

SPUR PLAN

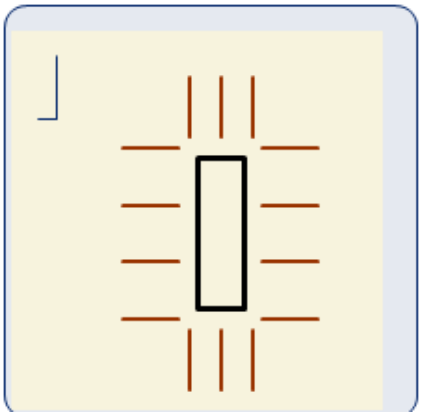

Figure 73, Punching shear verification for column C3-03

Project	4- First Floor Columns Punching	The Concrete Centre	
Client	Advisory Group	Made by: KL	Date: 05-May-2015	Page:
Location	C3-04		
PUNCHING SHEAR to BS EN 1992-1: 2004	RE-ENTRANT COLUMN	Revision: 0	Revision: -	Job No: A12713
Originated from TCC13.xlsm v4.9 on CD	© 2003-15 TCC		

MATERIALS

fck	N/mm²	40	
fyk	N/mm²	500	
Steel class		B	

STATUS

VALID DESIGN

.

LEGEND

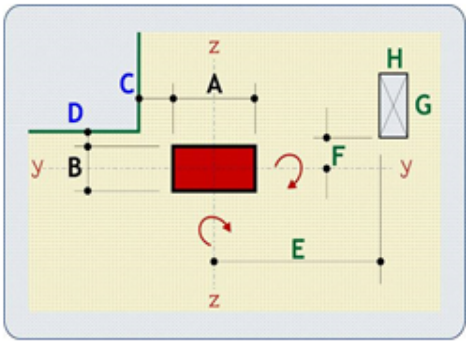

DIMENSIONS

A	mm	200	E	mm	0
B	mm	600	F	mm	0
C	mm	600	G	mm	0
D	mm	150	H	mm	0

LOADING

V_{Ed}	kN	210.0
ult UDL	kN/m²	0.00

ß = 1.275 braced structure, adjacent spans differ no more than 25%

SLAB

			dz	mm	170.5	Asz	mm²/m	1340	in B + 6d	ρx = 0.786
h	mm	225	dy	mm	151.5	Asy	mm²/m	1340	in A + 6d	ρy = 0.884
			d	mm	161				100ρL % =	0.834

RESULTS

βV_{Ed} = 267.8 kN

At col. face, vEd = 1.039 N/mm²

$v_{Rd,c}$ = 0.7725 N/mm² *Equation (6.47)*

At 2d perimeter, $v_{Ed,red}$ = 0.4590 N/mm²

Uout required = 1600 (≈ See Fig 6.22B) *Equation (6.54)*

No links required

SPUR PLAN

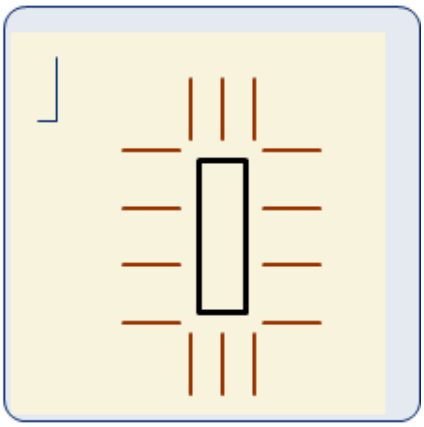

Figure 74, Punching shear verification for column C3-04

APPENDIX F: PUNCHING SHEAR VERIFICATIONS FOR COLUMN/SLAB AND PILE/SLAB INTERFACES IN BASEMENT SLAB

The calculations for the piles performed in the software Shearail are shown below.

Pile 1

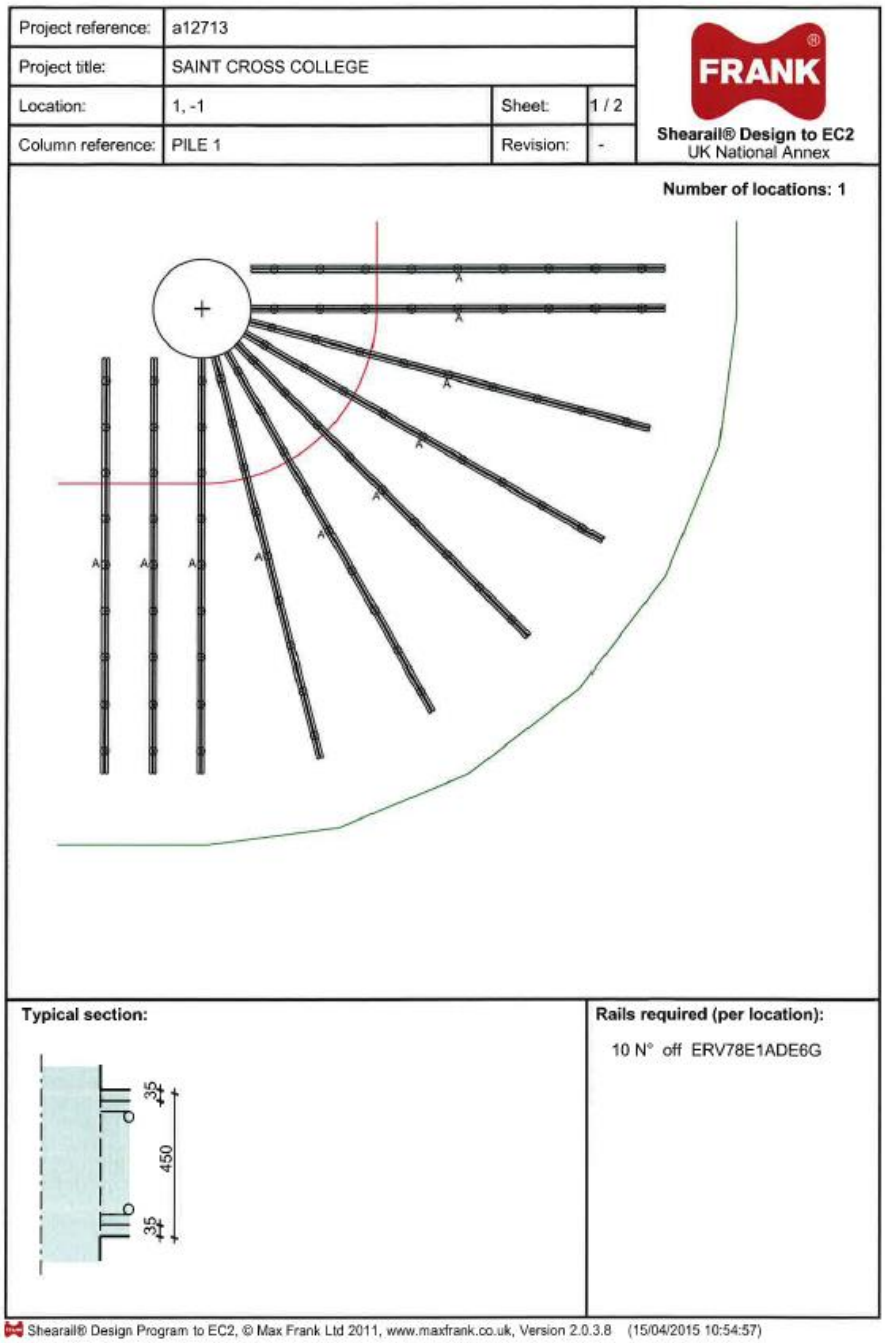

Project reference:	a12713		
Project title:	SAINT CROSS COLLEGE		
Location:	1, -1	Sheet:	2 / 2
Column reference:	PILE 1	Revision:	-

FRANK®
Shearail® Design to EC2
UK National Annex

Input data (Circular, internal corner):

Load Ved	1400 kN	**Slab depth**	450 mm	**Column Ø (A)**	600 mm	**T1 reinf.**	32@150=5361.65 mm²
β	1.5	**Top cover**	35 mm	**Offset (C)**	700 mm	**T2 reinf.**	32@100=8042.48 mm²
Load reduction	N/A	**Bottom cover**	35 mm	**Offset (D)**	530 mm	**Concrete**	40/50

Calculation:

d =	450 - 35 - 32/2 - 32/2 =	383 mm
d_y =	450 - 35 - 32/2 =	399 mm
d_z =	450 - 35 - 32 - 32/2 =	367 mm
u_0 =	(Π x 600) / 4	471.24 mm
$\beta\ v_{ED}$ =	1.5 x 1400 =	2100 kN
$v_{ED\,0}$ =	(2100 x 10³) / (471.2389 x 383) =	11.64 MPa
f_{cd} =	(1 x 40) / 1.5 =	26.67 MPa
$v_{Rd.max}$ =	0.3 x 26.67 (1 - (40 / 250)) =	6.72 MPa
	$v_{ED\,0} > v_{Rd.max}$ (11.64 > 6.72) - Fail at column face	
u_1 =	0.5 Π x ((600 / 2) + 2 x 383) + (600 / 2) + 530 + 1.5 x 383 + (600 / 2)	3378.97 mm
$C_{Rd.c}$ =	0.18 / 1.5 =	0.12
k =	1 + √(200 / 383) =	1.72
	$k \leq 2.00$	OK
v_{min} =	0.035 x (1.72$^{3/2}$ x √(40) =	0.5 MPa
$v_{Ed\,1}$ =	(1.5 x 1400 x 10³) / (3378.97 x 383) =	1.62 MPa
ρ_l =	√((5361.65 / (1000 x 399)) x (8042.48 / (1000 x 367))) =	0.01716
	$\rho_l \leq 0.02$	OK
$v_{Rd.c}$ =	0.12 x 1.72 x (100 x 0.01716 x 40)$^{1/3}$ =	0.846385 MPa
	$v_{Rd.c} \geq v_{min}$ therefore use $v_{Rd.c}$ for further calculations	
	$v_{Ed1} \geq v_{Rd.c}$ therefore Shearail® required	
	$v_{Ed1} \leq 2\ v_{Rd.c}$ - Control perimeter OK	(v_{Ed1} = 1.92 $v_{Rd.c}$)
$u_{out\ required}$ =	(1.5 x 1400 x 10³) / (0.85 x 383) =	6478.17 mm
f_{ywd} =	500 / 1.15 =	434.78 MPa
$f_{ywd.ef}$ =	250 + 0.25 x 383 =	345.75 MPa
	$f_{ywd.ef} \leq f_{ywd}$	OK
s_r =	stud spacing along rail =	280 mm
s_t =	maximum spacing between rails within control perimeter =	543 mm
$A_{sw.min}$ =	(0.08 x 543 x 280 x √(40)) / (1.5 x 500) =	102.57 mm²
A_{sw} =	((1.62 - (0.75 x 0.85)) x 3378.97 x 280) / (1.5 x 345.75 x 12) =	150.18 mm²
	$A_{sw} > A_{sw.min}$ therefore $A_{sw\ required}$ =	150.18 mm²
	Provide Ø14 mm studs =	153.94 mm²

Pile 2

Project reference:	A12713		
Project title:	SAINT CROSS COLLEGE		
Location:		Sheet:	1 / 2
Column reference:	PILE 2	Revision:	-

FRANK®

Shearail® Design to EC2
UK National Annex

Number of locations: 1

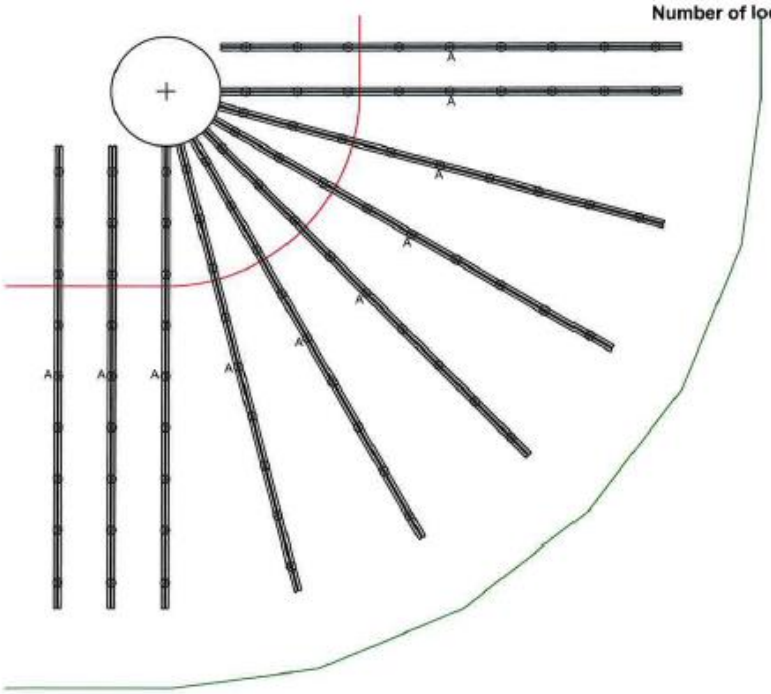

Typical section:

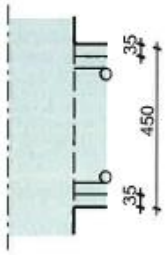

Rails required (per location):

10 N° off ERV78E1ADE6G

Shearail® Design Program to EC2, © Max Frank Ltd 2011, www.maxfrank.co.uk, Version 2.0.3.8 (15/04/2015 10:55:20)

Project reference:	A12713		
Project title:	SAINT CROSS COLLEGE		
Location:		Sheet:	2 / 2
Column reference:	PILE 2	Revision:	-

FRANK®

Shearail® Design to EC2
UK National Annex

Input data (Circular, internal corner):

Load Ved	1400 kN	**Slab depth**	450 mm	**Column Ø (A)**	600 mm	**T1 reinf.**	32@100=8042.48 mm²
β	1.5	**Top cover**	35 mm	**Offset (C)**	850 mm	**T2 reinf.**	32@100=8042.48 mm²
Load reduction	N/A	**Bottom cover**	35 mm	**Offset (D)**	230 mm	**Concrete**	40/50

Calculation:

d =	450 - 35 - 32/2 - 32/2 =	383 mm
d_y =	450 - 35 - 32/2 =	399 mm
d_z =	450 - 35 - 32 - 32/2 =	367 mm
u_0 =	(Π x 600) / 4	471.24 mm
βv_{ED} =	1.5 x 1400 =	2100 kN
$v_{ED\,0}$ =	(2100 x 10³) / (471.2389 x 383) =	11.64 MPa
f_{cd} =	(1 x 40) / 1.5 =	26.67 MPa
$v_{Rd.max}$ =	0.3 x 26.67 (1 - (40 / 250)) =	6.72 MPa
	$v_{ED\,0} > v_{Rd.max}$ (11.64 > 6.72) - Fail at column face	
u_1 =	0.5 Π x ((600 / 2) + 2 x 383) + (600 / 2) + 230 + 1.5 x 383 + (600 / 2)	3078.97 mm
$C_{Rd.c}$ =	0.18 / 1.5 =	0.12
k =	1 + √(200 / 383) =	1.72
	k ≤ 2.00	OK
v_{min} =	0.035 x (1.72$^{3/2}$ x √(40) =	0.5 MPa
$v_{Ed\,1}$ =	(1.5 x 1400 x 10³) / (3078.97 x 383) =	1.78 MPa
ρ_l =	√((8042.48 / (1000 x 399)) x (8042.48 / (1000 x 367))) =	0.021017
	ρ_l > 0.02 therefore ρ_l = 0.02 - Limited to maximum	
$v_{Rd.c}$ =	0.12 x 1.72 x (100 x 0.02 x 40)$^{1/3}$ =	0.89071 MPa
	$v_{Rd.c} \geq v_{min}$ therefore use $v_{Rd.c}$ for further calculations	
	$v_{Ed1} \geq v_{Rd.c}$ therefore Shearail® required	
	$v_{Ed1} \leq 2\ v_{Rd.c}$ - Control perimeter OK	($v_{Ed1} = 2\ v_{Rd.c}$)
$u_{out\ required}$ =	(1.5 x 1400 x 10³) / (0.89 x 383) =	6155.8 mm
f_{ywd} =	500 / 1.15 =	434.78 MPa
$f_{ywd.ef}$ =	250 + 0.25 x 383 =	345.75 MPa
	$f_{ywd.ef} \leq f_{ywd}$	OK
s_r =	stud spacing along rail =	280 mm
s_t =	maximum spacing between rails within control perimeter =	294 mm
$A_{sw.min}$ =	(0.08 x 294 x 280 x √(40)) / (1.5 x 500) =	55.53 mm²
A_{sw} =	((1.78 - (0.75 x 0.89)) x 3078.97 x 280) / (1.5 x 345.75 x 10) =	184.98 mm²
	$A_{sw} > A_{sw.min}$ therefore $A_{sw\ required}$ =	184.98 mm²
	Provide Ø16 mm studs =	201.06 mm²
$U_{out\ provided}$	(from graphical interface) =	6507.9 mm

Piles 3,4

Project reference:	A12713		
Project title:	SAINT CROSS COLLEGE		
Location:		Sheet:	1 / 2
Column reference:	PILES 3, 4	Revision:	-

FRANK

Shearail® Design to EC2
UK National Annex

Number of locations: 1

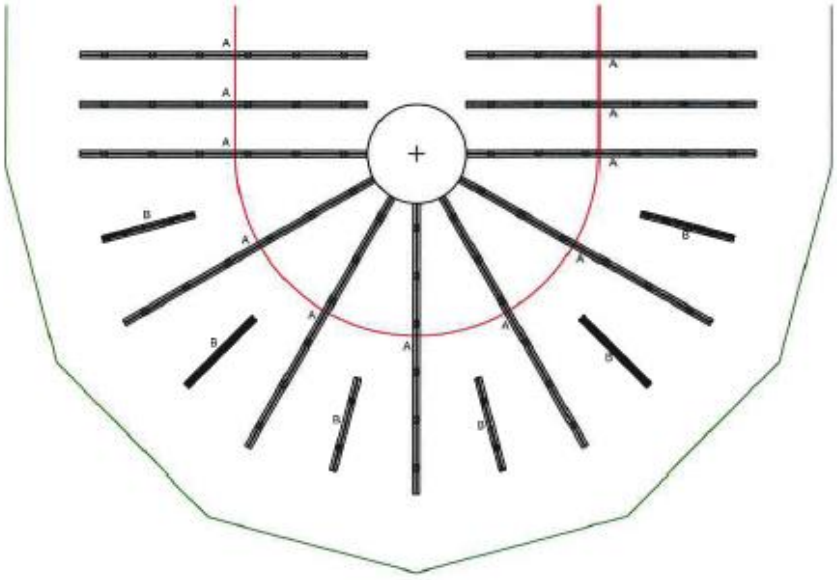

Typical section:

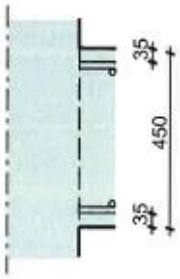

Rails required (per location):

Ⓐ 11 N° off ER1A2F6E9F6U
Ⓑ 6 N° off ER1DE91B3F6W

Shearail® Design Program to EC2, © Max Frank Ltd 2011, www.maxfrank.co.uk, Version 2.0.3.8 (15/04/2015 10:51:52)

Project reference:	A12713		
Project title:	SAINT CROSS COLLEGE		
Location:		Sheet:	2 / 2
Column reference:	PILES 3, 4	Revision:	-

FRANK®

Shearail® Design to EC2
UK National Annex

Input data (Circular, edge column):

Load Ved	1250 kN	**Slab depth**	450 mm	**Column Ø (A)**	600 mm	**T1 reinf.**	16@200=1005.31 mm²
β	1.4	**Top cover**	35 mm	**Offset (C)**	N/A	**T2 reinf.**	16@200=1005.31 mm²
Load reduction	N/A	**Bottom cover**	35 mm	**Offset (D)**	850 mm	**Concrete**	40/50

Calculation:

d =	450 - 35 - 16/2 - 16/2 =	399 mm
d_y =	450 - 35 - 16/2 =	407 mm
d_z =	450 - 35 - 16 - 16/2 =	391 mm
u_0 =	(Π x 600) / 2	942.48 mm
$\beta\ v_{ED}$ =	1.4 x 1250 =	1750 kN
$v_{ED\ 0}$ =	(1750 x 10³) / (942.4778 x 399) =	4.65 MPa
f_{cd} =	(1 x 40) / 1.5 =	26.67 MPa
$v_{Rd.max}$ =	0.3 x 26.67 (1 - (40 / 250)) =	6.72 MPa
	$v_{ED\ 0} \leq v_{Rd.max}$ (4.65 ≤ 6.72)	OK
u_1 =	Π x ((600 / 2) + 2 x 399) + 2 x (1.5 x 399 + (600 / 2))	5246.47 mm
$C_{Rd.c}$ =	0.18 / 1.5 =	0.12
k =	1 + √(200 / 399) =	1.71
	$k \leq 2.00$	OK
v_{min} =	0.035 x (1.71$^{3/2}$ x √(40) =	0.49 MPa
$v_{Ed\ 1}$ =	(1.4 x 1250 x 10³) / (5246.47 x 399) =	0.84 MPa
ρ_l =	√((1005.31 / (1000 x 407)) x (1005.31 / (1000 x 391))) =	0.00252
	$\rho_l \leq 0.02$	OK
$v_{Rd.c}$ =	0.12 x 1.71 x (100 x 0.00252 x 40)$^{1/3}$ =	0.44275 MPa
	$v_{Rd.c}$ < v_{min} therefore use v_{min} for further calculations	
	v_{Ed1} ≥ v_{min} therefore Shearail® required	
	$v_{Ed1} \leq 2\ v_{min}$ - Control perimeter OK	(v_{Ed1} = 1.89 v_{min})
$u_{out\ required}$ =	(1.4 x 1250 x 10³) / (0.49 x 399) =	8876.43 mm
f_{ywd} =	500 / 1.15 =	434.78 MPa
$f_{ywd.ef}$ =	250 + 0.25 x 399 =	349.75 MPa
	$f_{ywd.ef} \leq f_{ywd}$	OK
s_r =	stud spacing along rail =	290 mm
s_t =	maximum spacing between rails within control perimeter =	530.58 mm
$A_{sw.min}$ =	(0.08 x 530.58 x 290 x √(40)) / (1.5 x 500) =	103.8 mm²
A_{sw} =	((0.84 - (0.75 x 0.49)) x 5246.47 x 290) / (1.5 x 349.75 x 11) =	122.7 mm²
	A_{sw} > $A_{sw.min}$ therefore $A_{sw\ required}$ =	**122.7 mm²**
	Provide Ø14 mm studs =	**153.94 mm²**
$U_{out\ provided}$	**(from graphical interface) =**	**9598.94 mm**
	Stud spacing :	**145/290 mm**

Shearail® Design Program to EC2, © Max Frank Ltd 2011, www.maxfrank.co.uk, Version 2.0.3.8 (15/04/2015 10:51:52)

Pile 5

Project reference:	A12713		
Project title:	SAINT CROSS COLLEGE		
Location:		Sheet:	1 / 2
Column reference:	PILE 5	Revision:	-

FRANK®

Shearail® Design to EC2
UK National Annex

Number of locations: 1

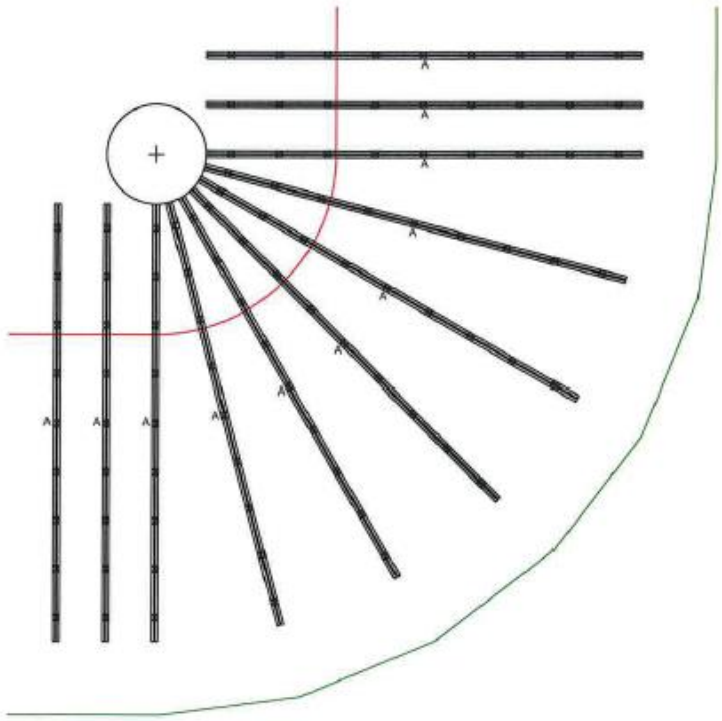

Typical section:

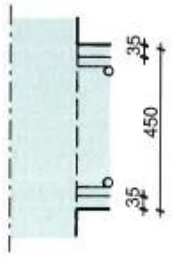

Rails required (per location):

11 N° off ER1A2F6E9F6P

Shearail® Design Program to EC2, © Max Frank Ltd 2011, www.maxfrank.co.uk, Version 2.0.3.8 (15/04/2015 10:52:06)

Project reference:	A12713		
Project title:	SAINT CROSS COLLEGE		
Location:		Sheet:	2 / 2
Column reference:	PILE 5	Revision:	-

FRANK®

Shearail® Design to EC2
UK National Annex

Input data (Circular, internal corner):

Load Ved	1200 kN	**Slab depth**	450 mm	**Column Ø (A)**	600 mm	**T1 reinf.**	25@150=3272.49 mm²
β	1.5	**Top cover**	35 mm	**Offset (C)**	1050 mm	**T2 reinf.**	25@150=3272.49 mm²
Load reduction	N/A	**Bottom cover**	35 mm	**Offset (D)**	1600 mm	**Concrete**	40/50

Calculation:

d =	450 - 35 - 25/2 - 25/2 =	391 mm
d_y =	450 - 35 - 25/2 =	403 mm
d_z =	450 - 35 - 25 - 25/2 =	378 mm
u_0 =	(Π x 600) / 4	471.24 mm
$\beta\ v_{ED}$ =	1.5 x 1200 =	1800 kN
$v_{ED\,0}$ =	(1800 x 10³) / (471.2389 x 391) =	9.77 MPa
f_{cd} =	(1 x 40) / 1.5 =	26.67 MPa
$v_{Rd.max}$ =	0.3 x 26.67 (1 - (40 / 250)) =	6.72 MPa
	$v_{ED\,0} > v_{Rd.max}$ (9.77 > 6.72) - Fail at column face	
u_1 =	0.5 Π x ((600 / 2) + 2 x 391) + 1.5 x 391 + (600 / 2) + 1.5 x 391 + (600 / 2)	3472.6 mm
$C_{Rd.c}$ =	0.18 / 1.5 =	0.12
k =	1 + √(200 / 391) =	1.72
	$k \leq 2.00$	OK
v_{min} =	0.035 x (1.72$^{3/2}$ x √(40) =	0.5 MPa
$v_{Ed\,1}$ =	(1.5 x 1200 x 10³) / (3472.6 x 391) =	1.33 MPa
ρ_l =	√((3272.49 / (1000 x 403)) x (3272.49 / (1000 x 378))) =	0.008385
	$\rho_l \leq 0.02$	OK
$v_{Rd.c}$ =	0.12 x 1.72 x (100 x 0.008385 x 40)$^{1/3}$ =	0.663757 MPa
	$v_{Rd.c} \geq v_{min}$ therefore use $v_{Rd.c}$ for further calculations	
	$v_{Ed1} \geq v_{Rd.c}$ therefore Shearail® required	
	$v_{Ed1} \leq 2\ v_{Rd.c}$ - Control perimeter OK	($v_{Ed1} = 2\ v_{Rd.c}$)
$u_{out\ required}$ =	(1.5 x 1200 x 10³) / (0.66 x 391) =	6935.65 mm
f_{ywd} =	500 / 1.15 =	434.78 MPa
$f_{ywd.ef}$ =	250 + 0.25 x 391 =	347.75 MPa
	$f_{ywd.ef} \leq f_{ywd}$	OK
s_r =	stud spacing along rail =	290 mm
s_t =	maximum spacing between rails within control perimeter =	297 mm
$A_{sw.min}$ =	(0.08 x 297 x 290 x √(40)) / (1.5 x 500) =	58.1 mm²
A_{sw} =	((1.33 - (0.75 x 0.66)) x 3472.6 x 290) / (1.5 x 347.75 x 11) =	145.3 mm²
	$A_{sw} > A_{sw.min}$ therefore $A_{sw\ required}$ =	**145.3 mm²**
	Provide Ø14 mm studs =	**153.94 mm²**
$U_{out\ provided}$	**(from graphical interface) =**	**7027.98 mm**
	Stud spacing :	**145/290 mm**

Shearail® Design Program to EC2, © Max Frank Ltd 2011, www.maxfrank.co.uk, Version 2.0.3.8 (15/04/2015 10:52:06)

Pile 6

Project reference:	A12713		
Project title:	SAINT CROSS COLLEGE		
Location:		Sheet:	1 / 2
Column reference:	PILE 6	Revision:	-

FRANK®

Shearail® Design to EC2
UK National Annex

Number of locations: 1

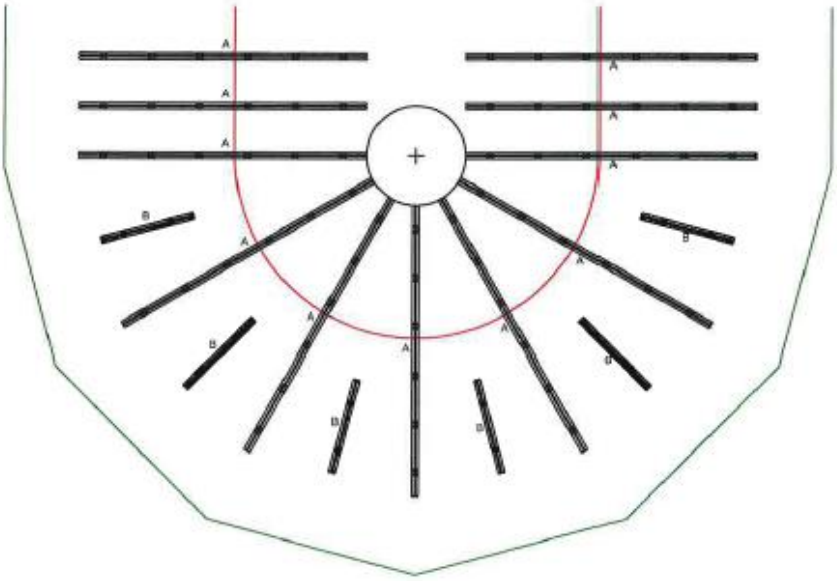

Typical section:

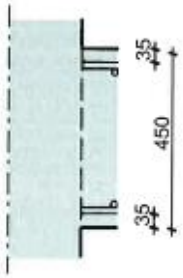

Rails required (per location):

Ⓐ 11 N° off ER1A2F6E9F6U
Ⓑ 6 N° off ER1DE91B3F6W

Shearail® Design Program to EC2, © Max Frank Ltd 2011, www.maxfrank.co.uk, Version 2.0.3.8 (15/04/2015 10:52:17)

Project reference:	A12713		
Project title:	SAINT CROSS COLLEGE		
Location:		Sheet:	2 / 2
Column reference:	PILE 6	Revision:	-

FRANK®
Shearail® Design to EC2
UK National Annex

Input data (Circular, edge column):

Load Ved	1300 kN	**Slab depth**	450 mm	**Column Ø (A)**	600 mm	**T1 reinf.**	16@200=1005.31 mm²
β	1.4	**Top cover**	35 mm	**Offset (C)**	N/A	**T2 reinf.**	16@200=1005.31 mm²
Load reduction	N/A	**Bottom cover**	35 mm	**Offset (D)**	1600 mm	**Concrete**	40/50

Calculation:

d =	450 - 35 - 16/2 - 16/2 =	399 mm
d_y =	450 - 35 - 16/2 =	407 mm
d_z =	450 - 35 - 16 - 16/2 =	391 mm
u_0 =	(Π x 600) / 2	942.48 mm
$\beta\ v_{ED}$ =	1.4 x 1300 =	1820 kN
$v_{ED\,0}$ =	(1820 x 10^3) / (942.4778 x 399) =	4.84 MPa
f_{cd} =	(1 x 40) / 1.5 =	26.67 MPa
$v_{Rd.max}$ =	0.3 x 26.67 (1 - (40 / 250)) =	6.72 MPa
	$v_{ED\,0} \leq v_{Rd.max}$ (4.84 ≤ 6.72)	OK
u_1 =	Π x ((600 / 2) + 2 x 399) + 2 x (1.5 x 399 + (600 / 2))	5246.47 mm
$C_{Rd.c}$ =	0.18 / 1.5 =	0.12
k =	1 + √(200 / 399) =	1.71
	$k \leq 2.00$	OK
v_{min} =	0.035 x ($1.71^{3/2}$ x √(40) =	0.49 MPa
$v_{Ed\,1}$ =	(1.4 x 1300 x 10^3) / (5246.47 x 399) =	0.87 MPa
ρ_l =	√((1005.31 / (1000 x 407)) x (1005.31 / (1000 x 391))) =	0.00252
	$\rho_l \leq 0.02$	OK
$v_{Rd.c}$ =	0.12 x 1.71 x (100 x 0.00252 x 40)$^{1/3}$ =	0.44275 MPa
	$v_{Rd.c}$ < v_{min} therefore use v_{min} for further calculations	
	v_{Ed1} ≥ v_{min} therefore Shearail® required	
	v_{Ed1} ≤ 2 v_{min} - Control perimeter OK	**(v_{Ed1} = 1.96 v_{min})**
$u_{out\ required}$ =	(1.4 x 1300 x 10^3) / (0.49 x 399) =	9231.49 mm
f_{ywd} =	500 / 1.15 =	434.78 MPa
$f_{ywd.ef}$ =	250 + 0.25 x 399 =	349.75 MPa
	$f_{ywd.ef} \leq f_{ywd}$	OK
s_r =	stud spacing along rail =	290 mm
s_t =	maximum spacing between rails within control perimeter =	530.58 mm
$A_{sw.min}$ =	(0.08 x 530.58 x 290 x √(40)) / (1.5 x 500) =	103.8 mm²
A_{sw} =	((0.87 - (0.75 x 0.49)) x 5246.47 x 290) / (1.5 x 349.75 x 11) =	131.52 mm²
	A_{sw} > $A_{sw.min}$ therefore $A_{sw\ required}$ =	**131.52 mm²**
	Provide Ø14 mm studs =	**153.94 mm²**
$U_{out\ provided}$	**(from graphical interface) =**	**9598.94 mm**
	Stud spacing :	**145/290 mm**

Shearail® Design Program to EC2, © Max Frank Ltd 2011, www.maxfrank.co.uk, Version 2.0.3.8 (15/04/2015 10:52:17)

Pile 10

Project reference:	A12713		
Project title:	SAINT CROSS COLLEGE		
Location:		Sheet:	1 / 2
Column reference:	PILE 10	Revision:	-

FRANK®

Shearail® Design to EC2
UK National Annex

Number of locations: 1

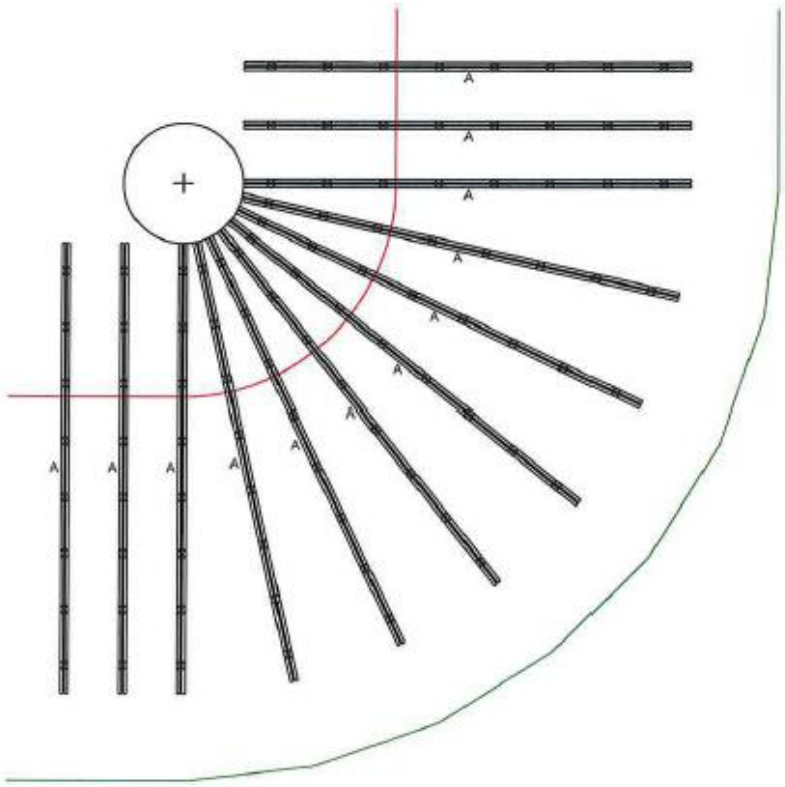

Typical section:

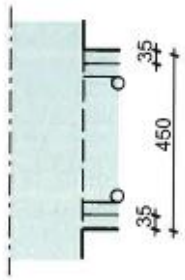

Rails required (per location):

12 N° off ER1A2E79FE6D

Shearail® Design Program to EC2, © Max Frank Ltd 2011, www.maxfrank.co.uk, Version 2.0.3.8 (15/04/2015 10:52:56)

Project reference:	A12713		
Project title:	SAINT CROSS COLLEGE		
Location:		Sheet:	2 / 2
Column reference:	PILE 10	Revision:	-

FRANK®

Shearail® Design to EC2
UK National Annex

Input data (Circular, internal corner):

Load Ved	1450 kN	**Slab depth**	450 mm	**Column Ø (A)**	600 mm	**T1 reinf.**	32@100=8042.48 mm²
β	1.5	**Top cover**	35 mm	**Offset (C)**	1050 mm	**T2 reinf.**	32@100=8042.48 mm²
Load reduction	N/A	**Bottom cover**	35 mm	**Offset (D)**	1600 mm	**Concrete**	40/50

Calculation:

d =	450 - 35 - 32/2 - 32/2 =	383 mm
d_y =	450 - 35 - 32/2 =	399 mm
d_z =	450 - 35 - 32 - 32/2 =	367 mm
u_0 =	(Π x 600) / 4	471.24 mm
$\beta\, v_{ED}$ =	1.5 x 1450 =	2175 kN
$v_{ED\,0}$ =	(2175 x 10³) / (471.2389 x 383) =	12.05 MPa
f_{cd} =	(1 x 40) / 1.5 =	26.67 MPa
$v_{Rd.max}$ =	0.3 x 26.67 (1 - (40 / 250)) =	6.72 MPa
	$v_{ED\,0} > v_{Rd.max}$ (12.05 > 6.72) - Fail at column face	
u_1 =	0.5 Π x ((600 / 2) + 2 x 383) + 1.5 x 383 + (600 / 2) + 1.5 x 383 + (600 / 2)	3423.47 mm
$C_{Rd.c}$ =	0.18 / 1.5 =	0.12
k =	1 + √(200 / 383) =	1.72
	$k \leq 2.00$	OK
v_{min} =	0.035 x (1.72$^{3/2}$ x √(40) =	0.5 MPa
$v_{Ed\,1}$ =	(1.5 x 1450 x 10³) / (3423.47 x 383) =	1.66 MPa
ρ_l =	√((8042.48 / (1000 x 399)) x (8042.48 / (1000 x 367))) =	0.021017
	$\rho_l > 0.02$ therefore $\rho_l = 0.02$ - Limited to maximum	
$v_{Rd.c}$ =	0.12 x 1.72 x (100 x 0.02 x 40)$^{1/3}$ =	0.89071 MPa
	$v_{Rd.c} \geq v_{min}$ therefore use $v_{Rd.c}$ for further calculations	
	$v_{Ed1} \geq v_{Rd.c}$ therefore Shearail® required	
	$v_{Ed1} \leq 2\, v_{Rd.c}$ - Control perimeter OK	($v_{Ed1} = 1.86\, v_{Rd.c}$)
$u_{out\ required}$ =	(1.5 x 1450 x 10³) / (0.89 x 383) =	6375.65 mm
f_{ywd} =	500 / 1.15 =	434.78 MPa
$f_{ywd,ef}$ =	250 + 0.25 x 383 =	345.75 MPa
	$f_{ywd.ef} \leq f_{ywd}$	OK
s_r =	stud spacing along rail =	280 mm
s_t =	maximum spacing between rails within control perimeter =	294 mm
$A_{sw.min}$ =	(0.08 x 294 x 280 x √(40)) / (1.5 x 500) =	55.53 mm²
A_{sw} =	((1.66 - (0.75 x 0.89)) x 3423.47 x 280) / (1.5 x 345.75 x 12) =	152.6 mm²
	$A_{sw} > A_{sw.min}$ therefore $A_{sw\ required}$ =	**152.6 mm²**
	Provide Ø14 mm studs =	**153.94 mm²**
$U_{out\ provided}$	**(from graphical interface) =**	**6415.04 mm**
	Stud spacing :	**140/280 mm**

Shearail® Design Program to EC2, © Max Frank Ltd 2011, www.maxfrank.co.uk, Version 2.0.3.8 (15/04/2015 10:52:56)

Pile 11

Project reference:	A12713		
Project title:	SAINT CROSS COLLEGE		
Location:		Sheet:	1 / 2
Column reference:	PILE 11	Revision:	-

FRANK®

Shearail® Design to EC2
UK National Annex

Number of locations: 1

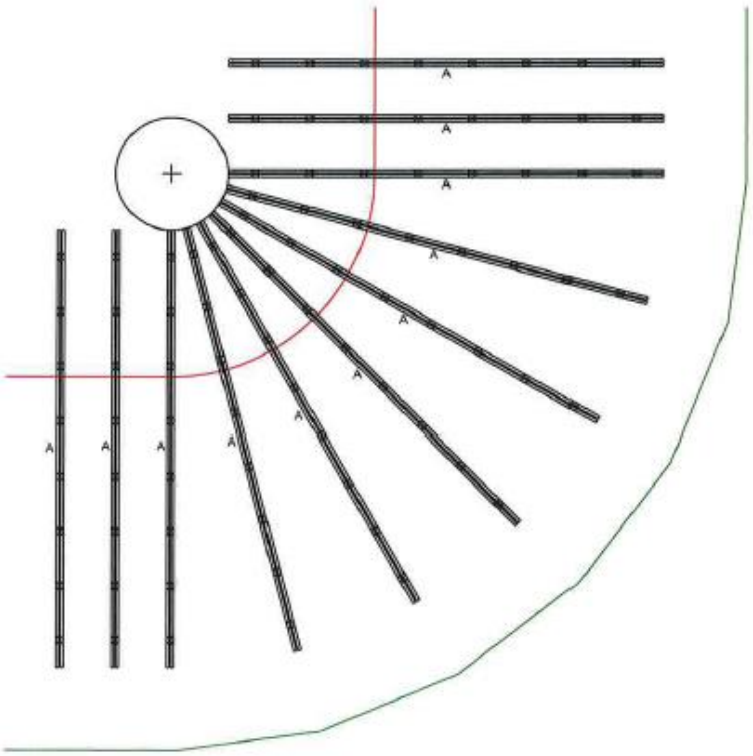

Typical section:

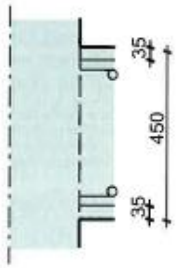

Rails required (per location):

11 N° off ER1A2F6E9F6D

Shearail® Design Program to EC2, © Max Frank Ltd 2011, www.maxfrank.co.uk, Version 2.0.3.8 (15/04/2015 10:53:15)

Project reference:	A12713		
Project title:	SAINT CROSS COLLEGE		
Location:		Sheet:	2 / 2
Column reference:	PILE 11	Revision:	-

FRANK®
Shearail® Design to EC2
UK National Annex

Input data (Circular, internal corner):

Load Ved	1250 kN	**Slab depth**	450 mm	**Column Ø (A)**	600 mm	**T1 reinf.**	25@100=4908.74 mm²
β	1.5	**Top cover**	35 mm	**Offset (C)**	1050 mm	**T2 reinf.**	25@100=4908.74 mm²
Load reduction	N/A	**Bottom cover**	35 mm	**Offset (D)**	1400 mm	**Concrete**	40/50

Calculation:

d =	450 - 35 - 25/2 - 25/2 =	391 mm
d_y =	450 - 35 - 25/2 =	403 mm
d_z =	450 - 35 - 25 - 25/2 =	378 mm
u_0 =	(Π x 600) / 4	471.24 mm
$\beta\ v_{ED}$ =	1.5 x 1250 =	1875 kN
$v_{ED\,0}$ =	(1875 x 10³) / (471.2389 x 391) =	10.18 MPa
f_{cd} =	(1 x 40) / 1.5 =	26.67 MPa
$v_{Rd.max}$ =	0.3 x 26.67 (1 - (40 / 250)) =	6.72 MPa
	$v_{ED\,0} > v_{Rd.max}$ (10.18 > 6.72) - Fail at column face	
u_1 =	0.5 Π x ((600 / 2) + 2 x 391) + 1.5 x 391 + (600 / 2) + 1.5 x 391 + (600 / 2)	3472.6 mm
$C_{Rd.c}$ =	0.18 / 1.5 =	0.12
k =	1 + √(200 / 391) =	1.72
	$k \leq 2.00$	OK
v_{min} =	0.035 x (1.72$^{3/2}$ x √(40) =	0.5 MPa
$v_{Ed\,1}$ =	(1.5 x 1250 x 10³) / (3472.6 x 391) =	1.38 MPa
ρ_l =	√((4908.74 / (1000 x 403)) x (4908.74 / (1000 x 378))) =	0.012577
	$\rho_l \leq 0.02$	OK
$v_{Rd.c}$ =	0.12 x 1.72 x (100 x 0.012577 x 40)$^{1/3}$ =	0.759812 MPa
	$v_{Rd.c} \geq v_{min}$ therefore use $v_{Rd.c}$ for further calculations	
	$v_{Ed1} \geq v_{Rd.c}$ therefore Shearail® required	
	$v_{Ed1} \leq 2\ v_{Rd.c}$ - Control perimeter OK	(v_{Ed1} = 1.82 $v_{Rd.c}$)
$u_{out\ required}$ =	(1.5 x 1250 x 10³) / (0.76 x 391) =	6311.29 mm
f_{ywd} =	500 / 1.15 =	434.78 MPa
$f_{ywd.ef}$ =	250 + 0.25 x 391 =	347.75 MPa
	$f_{ywd.ef} \leq f_{ywd}$	OK
s_r =	stud spacing along rail =	290 mm
s_t =	maximum spacing between rails within control perimeter =	297 mm
$A_{sw.min}$ =	(0.08 x 297 x 290 x √(40)) / (1.5 x 500) =	58.1 mm²
A_{sw} =	((1.38 - (0.75 x 0.76)) x 3472.6 x 290) / (1.5 x 347.75 x 11) =	142.35 mm²
	$A_{sw} > A_{sw.min}$ therefore $A_{sw\ required}$ =	142.35 mm²
	Provide Ø14 mm studs =	153.94 mm²
$U_{out\ provided}$	(from graphical interface) =	6573.75 mm
	Stud spacing :	145/290 mm

Shearail® Design Program to EC2, © Max Frank Ltd 2011, www.maxfrank.co.uk, Version 2.0.3.8 (15/04/2015 10:53:15)

Pile 12

Project reference:	A12713		
Project title:	SAINT CROSS COLLEGE		
Location:		Sheet:	1 / 2
Column reference:	PILE 12	Revision:	-

FRANK®

Shearail® Design to EC2
UK National Annex

Number of locations: 1

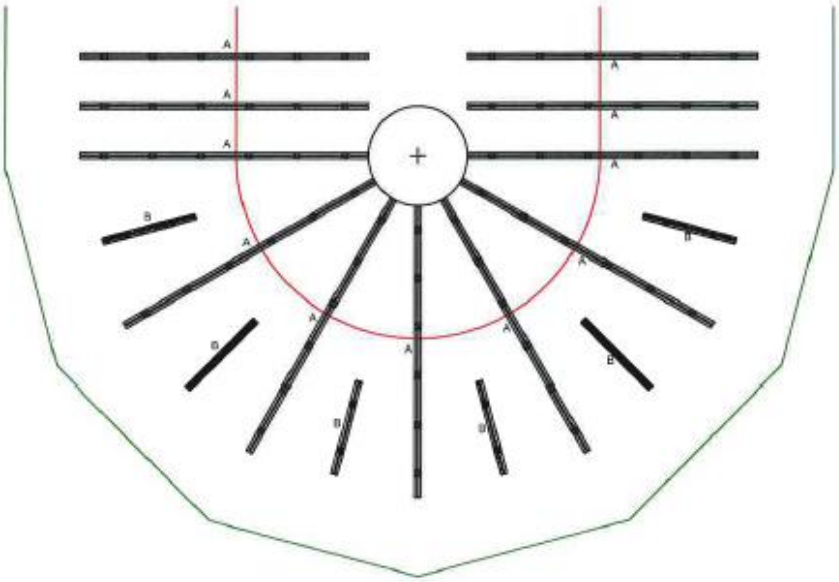

Typical section:

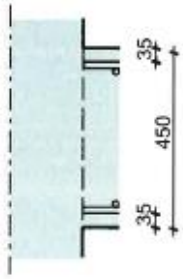

Rails required (per location):

Ⓐ 11 N° off ER1A2F6E9F6U
Ⓑ 6 N° off ER1DE91B3F6W

Shearail® Design Program to EC2, © Max Frank Ltd 2011, www.maxfrank.co.uk, Version 2.0.3.8 (15/04/2015 10:53:25)

Project reference:	A12713		
Project title:	SAINT CROSS COLLEGE		
Location:		Sheet:	2 / 2
Column reference:	PILE 12	Revision:	-

FRANK®
Shearail® Design to EC2
UK National Annex

Input data (Circular, edge column):

Load Ved	1300 kN	**Slab depth**	450 mm	**Column Ø (A)**	600 mm	**T1 reinf.**	16@200=1005.31 mm²
β	1.4	**Top cover**	35 mm	**Offset (C)**	N/A	**T2 reinf.**	16@200=1005.31 mm²
Load reduction	N/A	**Bottom cover**	35 mm	**Offset (D)**	1400 mm	**Concrete**	40/50

Calculation:

d =	450 - 35 - 16/2 - 16/2 =	399 mm
d_y =	450 - 35 - 16/2 =	407 mm
d_z =	450 - 35 - 16 - 16/2 =	391 mm
u_0 =	(Π x 600) / 2	942.48 mm
$\beta\, v_{ED}$ =	1.4 x 1300 =	1820 kN
$v_{ED\,0}$ =	(1820 x 10³) / (942.4778 x 399) =	4.84 MPa
f_{cd} =	(1 x 40) / 1.5 =	26.67 MPa
$v_{Rd.max}$ =	0.3 x 26.67 (1 - (40 / 250)) =	6.72 MPa
	$v_{ED\,0} \leq v_{Rd.max}$ (4.84 ≤ 6.72)	OK
u_1 =	Π x ((600 / 2) + 2 x 399) + 2 x (1.5 x 399 + (600 / 2))	5246.47 mm
$C_{Rd.c}$ =	0.18 / 1.5 =	0.12
k =	1 + √(200 / 399) =	1.71
	$k \leq 2.00$	OK
v_{min} =	0.035 x (1.71$^{3/2}$ x √(40) =	0.49 MPa
$v_{Ed\,1}$ =	(1.4 x 1300 x 10³) / (5246.47 x 399) =	0.87 MPa
ρ_l =	√((1005.31 / (1000 x 407)) x (1005.31 / (1000 x 391))) =	0.00252
	$\rho_l \leq 0.02$	OK
$v_{Rd.c}$ =	0.12 x 1.71 x (100 x 0.00252 x 40)$^{1/3}$ =	0.44275 MPa
	$v_{Rd.c} < v_{min}$ **therefore use** v_{min} **for further calculations**	
	$v_{Ed1} \geq v_{min}$ **therefore Shearail® required**	
	$v_{Ed1} \leq 2\, v_{min}$ - Control perimeter OK	($v_{Ed1} = 1.96\, v_{min}$)
$u_{out\ required}$ =	(1.4 x 1300 x 10³) / (0.49 x 399) =	9231.49 mm
f_{ywd} =	500 / 1.15 =	434.78 MPa
$f_{ywd.ef}$ =	250 + 0.25 x 399 =	349.75 MPa
	$f_{ywd.ef} \leq f_{ywd}$	OK
s_r =	stud spacing along rail =	290 mm
s_t =	maximum spacing between rails within control perimeter =	530.58 mm
$A_{sw.min}$ =	(0.08 x 530.58 x 290 x √(40)) / (1.5 x 500) =	103.8 mm²
A_{sw} =	((0.87 - (0.75 x 0.49)) x 5246.47 x 290) / (1.5 x 349.75 x 11) =	131.52 mm²
	$A_{sw} > A_{sw.min}$ therefore $A_{sw\ required}$ =	**131.52 mm²**
	Provide Ø14 mm studs =	**153.94 mm²**
$U_{out\ provided}$	**(from graphical interface) =**	**9598.94 mm**
	Stud spacing :	**145/290 mm**

Shearail® Design Program to EC2, © Max Frank Ltd 2011, www.maxfrank.co.uk, Version 2.0.3.8 (15/04/2015 10:53:25)

Piles 13,14

Project reference:	A12713		
Project title:	SAINT CROSS COLLEGE		
Location:		Sheet:	1 / 2
Column reference:	PILES 13,14	Revision:	-

FRANK®

Shearail® Design to EC2
UK National Annex

Number of locations: 1

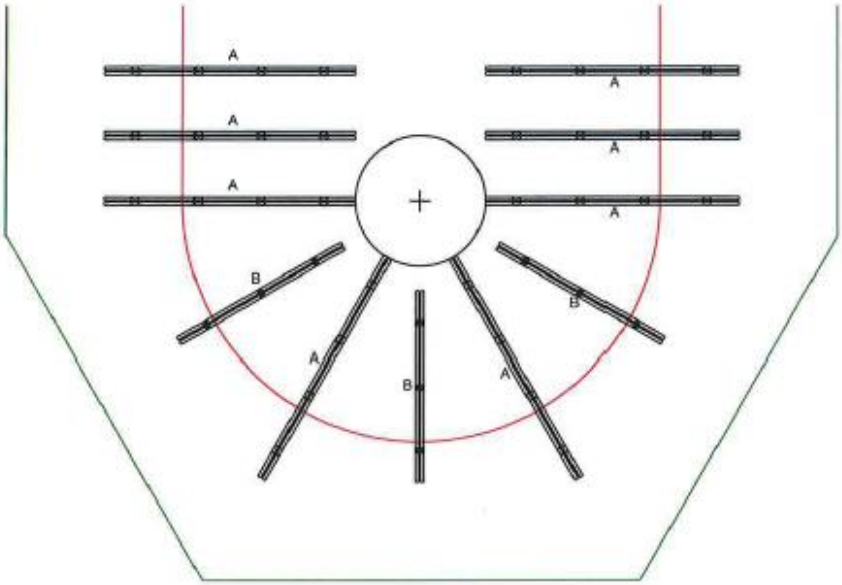

Typical section:

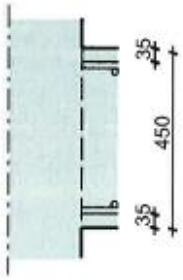

Rails required (per location):

Ⓐ 8 N° off ER1A2F6E9F6X
Ⓑ 3 N° off ER1DE91B3F6R

Shearail® Design Program to EC2, © Max Frank Ltd 2011, www.maxfrank.co.uk, Version 2.0.3.8 (15/04/2015 10:53:38)

Project reference:	A12713		
Project title:	SAINT CROSS COLLEGE		
Location:		Sheet:	2 / 2
Column reference:	PILES 13,14	Revision:	-

FRANK®

Shearail® Design to EC2
UK National Annex

Input data (Circular, edge column):

Load Ved	1000 kN	**Slab depth**	450 mm	**Column Ø (A)**	600 mm	**T1 reinf.**	16@200=1005.31 mm²
β	1.4	**Top cover**	35 mm	**Offset (C)**	N/A	**T2 reinf.**	16@200=1005.31 mm²
Load reduction	N/A	**Bottom cover**	35 mm	**Offset (D)**	1400 mm	**Concrete**	40/50

Calculation:

d =	450 - 35 - 16/2 - 16/2 =	399 mm
d_y =	450 - 35 - 16/2 =	407 mm
d_z =	450 - 35 - 16 - 16/2 =	391 mm
u_0 =	(Π x 600) / 2	942.48 mm
$\beta\, v_{ED}$ =	1.4 x 1000 =	1400 kN
$v_{ED\,0}$ =	(1400 x 10³) / (942.4778 x 399) =	3.72 MPa
f_{cd} =	(1 x 40) / 1.5 =	26.67 MPa
$v_{Rd.max}$ =	0.3 x 26.67 (1 - (40 / 250)) =	6.72 MPa
	$v_{ED\,0} \leq v_{Rd.max}$ (3.72 ≤ 6.72)	OK
u_1 =	Π x ((600 / 2) + 2 x 399) + 2 x (1.5 x 399 + (600 / 2))	5246.47 mm
$C_{Rd.c}$ =	0.18 / 1.5 =	0.12
k =	1 + √(200 / 399) =	1.71
	$k \leq 2.00$	OK
v_{min} =	0.035 x (1.71$^{3/2}$ x √(40) =	0.49 MPa
$v_{Ed\,1}$ =	(1.4 x 1000 x 10³) / (5246.47 x 399) =	0.67 MPa
ρ_l =	√((1005.31 / (1000 x 407)) x (1005.31 / (1000 x 391))) =	0.00252
	$\rho_l \leq 0.02$	OK
$v_{Rd.c}$ =	0.12 x 1.71 x (100 x 0.00252 x 40)$^{1/3}$ =	0.44275 MPa
	$v_{Rd.c} < v_{min}$ therefore use v_{min} for further calculations	
	$v_{Ed1} \geq v_{min}$ therefore Shearail® required	
	$v_{Ed1} \leq 2\, v_{min}$ - Control perimeter OK	**(v_{Ed1} = 1.51 v_{min})**
$u_{out\ required}$ =	(1.4 x 1000 x 10³) / (0.49 x 399) =	7101.14 mm
f_{ywd} =	500 / 1.15 =	434.78 MPa
$f_{ywd.ef}$ =	250 + 0.25 x 399 =	349.75 MPa
	$f_{ywd.ef} \leq f_{ywd}$	OK
s_r =	stud spacing along rail =	290 mm
s_t =	maximum spacing between rails within control perimeter =	514.23 mm
$A_{sw.min}$ =	(0.08 x 514.23 x 290 x √(40)) / (1.5 x 500) =	100.6 mm²
A_{sw} =	((0.67 - (0.75 x 0.49)) x 5246.47 x 290) / (1.5 x 349.75 x 8) =	108.1 mm²
	$A_{sw} > A_{sw.min}$ therefore $A_{sw\ required}$ =	**108.1 mm²**
	Provide Ø12 mm studs =	**113.1 mm²**
$U_{out\ provided}$	**(from graphical interface) =**	**7763.16 mm**
	Stud spacing :	**145/290 mm**

Shearail® Design Program to EC2, © Max Frank Ltd 2011, www.maxfrank.co.uk, Version 2.0.3.8 (15/04/2015 10:53:38)

Pile 15

Project reference:	A12713		
Project title:	SAINT CROSS COLLEGE		
Location:		Sheet:	1 / 2
Column reference:	PILE 15	Revision:	-

FRANK®

Shearail® Design to EC2
UK National Annex

Number of locations: 1

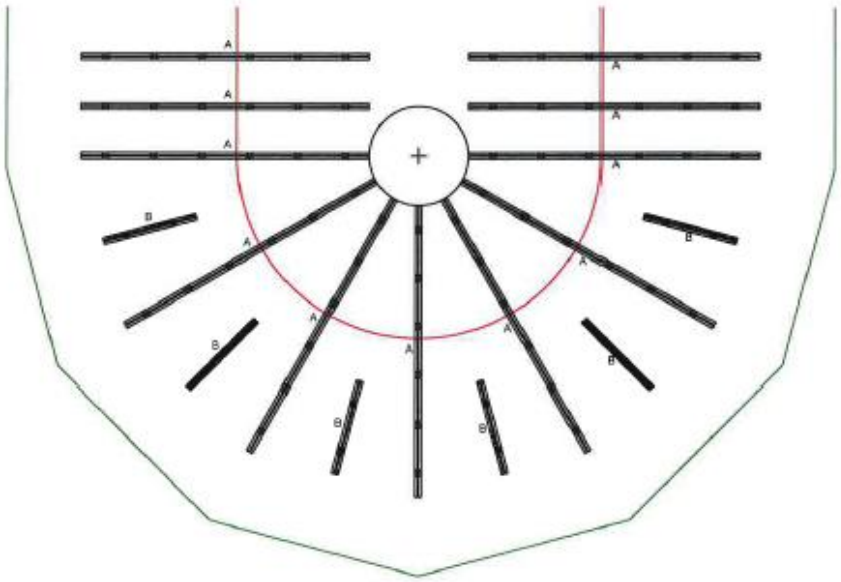

Typical section:

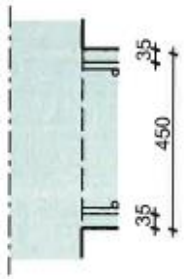

Rails required (per location):

Ⓐ 11 N° off ER1A2F6E9F6U
Ⓑ 6 N° off ER1DE91B3F6W

Shearail® Design Program to EC2, © Max Frank Ltd 2011, www.maxfrank.co.uk, Version 2.0.3.8 (15/04/2015 10:54:23)

Project reference:	A12713		
Project title:	SAINT CROSS COLLEGE		
Location:		Sheet:	2 / 2
Column reference:	PILE 15	Revision:	-

FRANK®
Shearail® Design to EC2
UK National Annex

Input data (Circular, edge column):

Load Ved	1450 kN	**Slab depth**	450 mm	**Column Ø (A)**	600 mm	**T1 reinf.**	16@100=2010.62 mm²
β	1.4	**Top cover**	35 mm	**Offset (C)**	N/A	**T2 reinf.**	16@100=2010.62 mm²
Load reduction	N/A	**Bottom cover**	35 mm	**Offset (D)**	1400 mm	**Concrete**	40/50

Calculation:

d =	450 - 35 - 16/2 - 16/2 =	399 mm
d_y =	450 - 35 - 16/2 =	407 mm
d_z =	450 - 35 - 16 - 16/2 =	391 mm
u_0 =	(Π x 600) / 2	942.48 mm
$\beta\, v_{ED}$ =	1.4 x 1450 =	2030 kN
$v_{ED\,0}$ =	(2030 x 10³) / (942.4778 x 399) =	5.4 MPa
f_{cd} =	(1 x 40) / 1.5 =	26.67 MPa
$v_{Rd.max}$ =	0.3 x 26.67 (1 - (40 / 250)) =	6.72 MPa
	$v_{ED\,0} \leq v_{Rd.max}$ (5.4 ≤ 6.72)	OK
u_1 =	Π x ((600 / 2) + 2 x 399) + 2 x (1.5 x 399 + (600 / 2))	5246.47 mm
$C_{Rd.c}$ =	0.18 / 1.5 =	0.12
k =	1 + √(200 / 399) =	1.71
	$k \leq 2.00$	OK
v_{min} =	0.035 x (1.71$^{3/2}$ x √(40) =	0.49 MPa
$v_{Ed\,1}$ =	(1.4 x 1450 x 10³) / (5246.47 x 399) =	0.97 MPa
ρ_l =	√((2010.62 / (1000 x 407)) x (2010.62 / (1000 x 391))) =	0.00504
	$\rho_l \leq 0.02$	OK
$v_{Rd.c}$ =	0.12 x 1.71 x (100 x 0.00504 x 40)$^{1/3}$ =	0.55783 MPa
	$v_{Rd.c} \geq v_{min}$ therefore use $v_{Rd.c}$ for further calculations	
	$v_{Ed1} \geq v_{Rd.c}$ therefore Shearail® required	
	$v_{Ed1} \leq 2\, v_{Rd.c}$ - Control perimeter OK	**(v_{Ed1} = 1.74 $v_{Rd.c}$)**
$u_{out\,required}$ =	(1.4 x 1450 x 10³) / (0.56 x 399) =	9120.55 mm
f_{ywd} =	500 / 1.15 =	434.78 MPa
$f_{ywd.ef}$ =	250 + 0.25 x 399 =	349.75 MPa
	$f_{ywd.ef} \leq f_{ywd}$	OK
s_r =	stud spacing along rail =	290 mm
s_t =	maximum spacing between rails within control perimeter =	530.58 mm
$A_{sw,min}$ =	(0.08 x 530.58 x 290 x √(40)) / (1.5 x 500) =	103.8 mm²
A_{sw} =	((0.97 - (0.75 x 0.56)) x 5246.47 x 290) / (1.5 x 349.75 x 11) =	145.37 mm²
	$A_{sw} > A_{sw.min}$ therefore $A_{sw\,required}$ =	**145.37 mm²**
	Provide Ø14 mm studs =	**153.94 mm²**
$U_{out\,provided}$	**(from graphical interface) =**	**9598.94 mm**
	Stud spacing :	**145/290 mm**

Shearail® Design Program to EC2, © Max Frank Ltd 2011, www.maxfrank.co.uk, Version 2.0.3.8 (15/04/2015 10:54:24)

Pile 16

Project reference:	A12713		
Project title:	SAINT CROSS COLLEGE		
Location:		Sheet:	1 / 2
Column reference:	PILE 16	Revision:	-

FRANK®

Shearail® Design to EC2
UK National Annex

Number of locations: 1

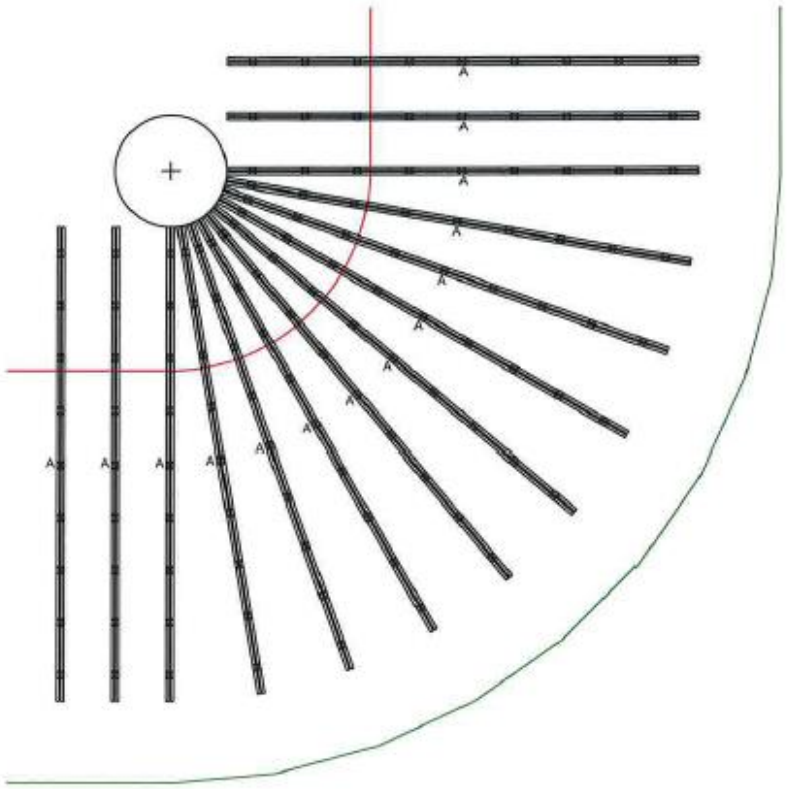

Typical section:

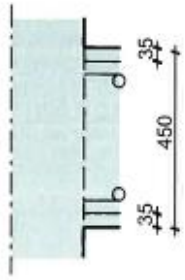

Rails required (per location):

14 N° off ER1A2E79FE6P

Shearail® Design Program to EC2, © Max Frank Ltd 2011, www.maxfrank.co.uk, Version 2.0.3.8 (15/04/2015 10:54:32)

Project reference:	A12713		
Project title:	SAINT CROSS COLLEGE		
Location:		Sheet:	2 / 2
Column reference:	PILE 16	Revision:	-

FRANK®

Shearail® Design to EC2
UK National Annex

Input data (Circular, internal corner):

Load Ved	1550 kN	**Slab depth**	450 mm	**Column Ø (A)**	600 mm	**T1 reinf.**	32@100=8042.48 mm²
β	1.5	**Top cover**	35 mm	**Offset (C)**	850 mm	**T2 reinf.**	32@100=8042.48 mm²
Load reduction	N/A	**Bottom cover**	35 mm	**Offset (D)**	1400 mm	**Concrete**	40/50

Calculation:

d =	450 - 35 - 32/2 - 32/2 =	383 mm
d_y =	450 - 35 - 32/2 =	399 mm
d_z =	450 - 35 - 32 - 32/2 =	367 mm
u_0 =	(Π x 600) / 4	471.24 mm
βv_{ED} =	1.5 x 1550 =	2325 kN
$v_{ED\,0}$ =	(2325 x 10³) / (471.2389 x 383) =	12.88 MPa
f_{cd} =	(1 x 40) / 1.5 =	26.67 MPa
$v_{Rd.max}$ =	0.3 x 26.67 (1 - (40 / 250)) =	6.72 MPa
	$v_{ED\,0} > v_{Rd.max}$ (12.88 > 6.72) - Fail at column face	
u_1 =	0.5 Π x ((600 / 2) + 2 x 383) + 1.5 x 383 + (600 / 2) + 1.5 x 383 + (600 / 2)	3423.47 mm
$C_{Rd.c}$ =	0.18 / 1.5 =	0.12
k =	1 + √(200 / 383) =	1.72
	$k \leq 2.00$	OK
v_{min} =	0.035 x (1.72$^{3/2}$ x √(40) =	0.5 MPa
$v_{Ed\,1}$ =	(1.5 x 1550 x 10³) / (3423.47 x 383) =	1.77 MPa
ρ_l =	√((8042.48 / (1000 x 399)) x (8042.48 / (1000 x 367))) =	0.021017
	$\rho_l > 0.02$ therefore $\rho_l = 0.02$ - Limited to maximum	
$v_{Rd.c}$ =	0.12 x 1.72 x (100 x 0.02 x 40)$^{1/3}$ =	0.89071 MPa
	$v_{Rd.c} \geq v_{min}$ therefore use $v_{Rd.c}$ for further calculations	
	$v_{Ed1} \geq v_{Rd.c}$ therefore Shearail® required	
	$v_{Ed1} \leq 2\ v_{Rd.c}$ - Control perimeter OK	(v_{Ed1} = 1.99 $v_{Rd.c}$)
$u_{out\ required}$ =	(1.5 x 1550 x 10³) / (0.89 x 383) =	6815.34 mm
f_{ywd} =	500 / 1.15 =	434.78 MPa
$f_{ywd.ef}$ =	250 + 0.25 x 383 =	345.75 MPa
	$f_{ywd.ef} \leq f_{ywd}$	OK
s_r =	stud spacing along rail =	280 mm
s_t =	maximum spacing between rails within control perimeter =	294 mm
$A_{sw.min}$ =	(0.08 x 294 x 280 x √(40)) / (1.5 x 500) =	55.53 mm²
A_{sw} =	((1.77 - (0.75 x 0.89)) x 3423.47 x 280) / (1.5 x 345.75 x 14) =	145.91 mm²
	$A_{sw} > A_{sw.min}$ therefore $A_{sw\ required}$ =	145.91 mm²
	Provide Ø14 mm studs =	153.94 mm²
$U_{out\ provided}$	(from graphical interface) =	6856.13 mm
	Stud spacing :	140/280 mm

Shearail® Design Program to EC2, © Max Frank Ltd 2011, www.maxfrank.co.uk, Version 2.0.3.8 (15/04/2015 10:54:32)

The calculations for the columns in the excel spreadsheet are shown below.

Column 1

Project	4- First Floor Columns Punching	The Concrete Centre	
Client	Advisory Group	Made by: KL	Date: 05-May-2015	Page:
Location	C3-01		
PUNCHING SHEAR to BS EN 1992-1: 2004	INTERNAL COLUMN	Checked:	Revision: -	Job No: A12713
Originated from TCC13.xlsm v4.9 on CD	© 2003-15 TCC		

MATERIALS

f_{ck}	N/mm²	40	
f_{yk}	N/mm²	500	
Steel class		B	

STATUS

VALID DESIGN

.

LEGEND

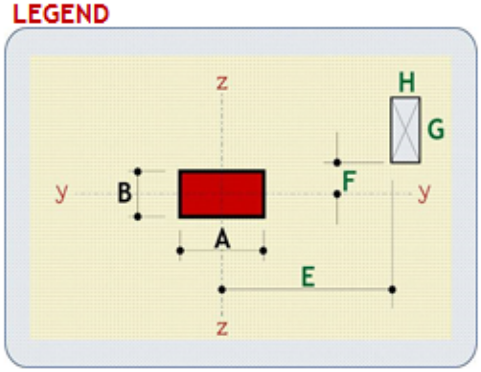

DIMENSIONS

A	mm	200	E	mm	0
B	mm	600	F	mm	0
G	mm	0	H	mm	0

LOADING

V_{Ed}	kN	300	
ult UDL	kN/m²	0.00	
ß =	1.150	braced structure, adjacent spans d	

SLAB

			dz	mm	395.5	Asz	mm²/m	1010	in B + 6d	px = 0.255
h	mm	450	dy	mm	376.5	Asy	mm²/m	1010	in A + 6d	py = 0.268
			d	mm	386				100ρL % =	0.262

RESULTS

βV_{Ed} =	345.0	kN	$v_{Rd,c}$ =	0.4993	N/mm²	Equation (6.47)
At col. face, vEd =	0.559	N/mm²	At 2d perimeter, $v_{Ed,red}$ =	0.1386	N/mm²	
			Uout required =	1600	(≈ See Fig 6.22B)	Equation (6.54)

No links required

SPUR PLAN

Column 2

Project	4- First Floor Columns Punching	**The Concrete Centre**	
Client	Advisory Group	Made by: KL	Date: 05-May-2015	Page:
Location	C3-01	Checked:	Revision: -	Job No: A12713
	PUNCHING SHEAR to BS EN 1992-1: 2004	INTERNAL		
	Originated from TCC13.xlsm v4.9 on CD © 2003-15 TCC	COLUMN		

MATERIALS f_{ck} N/mm² 40 **STATUS** **LEGEND**

f_{yk} N/mm² 500 *VALID DESIGN*

Steel class B .

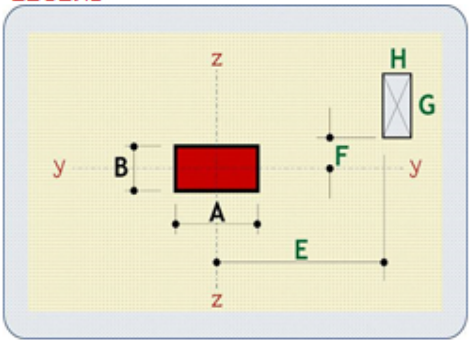

DIMENSIONS

A	mm	200	E	mm	0
B	mm	600	F	mm	0
G	mm	0	H	mm	0

LOADING V_{Ed} kN 1400

ult UDL kN/m² 0.00

ß = 1.150 braced structure, adjacent spans d

SLAB

			dz	mm	395.5	Asz	mm²/m	1010	in B + 6d	px = 0.255
h	mm	450	dy	mm	376.5	Asy	mm²/m	1010	in A + 6d	py = 0.268
			d	mm	386				100ρL % =	0.262

RESULTS βV_{Ed} = 1610.0 kN $v_{Rd,c}$ = 0.4993 N/mm² *Equation (6.47)*

At col. face, vEd = 2.607 N/mm² At 2d perimeter, $v_{Ed,red}$ = 0.6466 N/mm²

Uout required = 8354 (≈ See Fig 6.22B) *Equation (6.54)*

SOLUTION *Fig 6.22 (B)*

12 link spurs of 3B10 @ 275 *36 links*

.

St (average) = 275 mm Sr = 275 mm

Asw/Sr req = 3.378 *(6.52) & (9.11)*

Asw/Sr prov = 3.427 mm

First link perimeter 190 mm from column face

Outer links at 740 mm from column face

Uout = 8926 mm > 8,354 mm

See GEOMETRY page for link locations.

Some links shown may need to be re-located to avoid holes.

SPUR PLAN

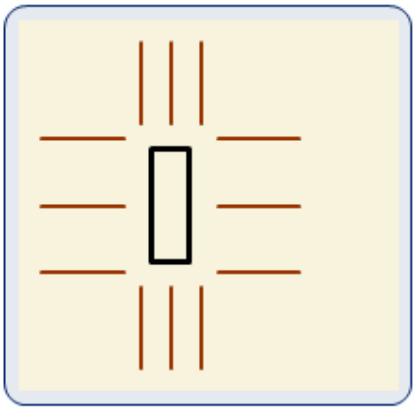

Column 3

Project	4- First Floor Columns Punching	**The Concrete Centre**	
Client	Advisory Group	Made by: KL	Date: 05-May-2015	Page:
Location	C3-01		
	PUNCHING SHEAR to BS EN 1992-1: 2004 — INTERNAL COLUMN	Checked:	Revision: -	Job No: A12713
	Originated from TCC13.xlsm v4.9 on CD — © 2003-15 TCC		

MATERIALS f_{ck} N/mm² 40 — **STATUS** *VALID DESIGN*

f_{yk} N/mm² 500

Steel class B

LEGEND

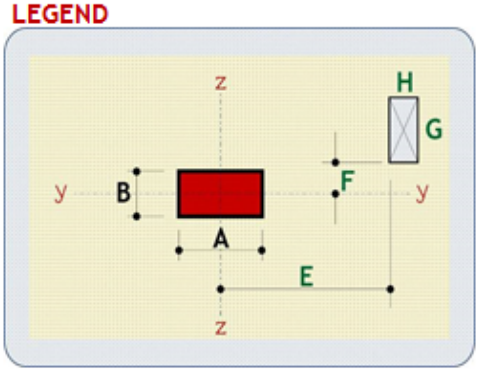

DIMENSIONS

A	mm	200	E	mm	0
B	mm	600	F	mm	0
G	mm	0	H	mm	0

LOADING V_{Ed} kN 1200

ult UDL kN/m² 0.00

ß = 1.150 braced structure, adjacent spans d

SLAB

			dz	mm	395.5	Asz	mm²/m	1010	in B + 6d	px = 0.255
h	mm	450	dy	mm	376.5	Asy	mm²/m	1010	in A + 6d	py = 0.268
			d	mm	386				100ρL % =	0.262

RESULTS βV_{Ed} = 1380.0 kN — $v_{Rd,c}$ = 0.4993 N/mm² *Equation (6.47)*

At col. face, vEd = 2.234 N/mm² — At 2d perimeter, $v_{Ed,red}$ = 0.5542 N/mm²

Uout required = 7161 (≈ See Fig 6.22B) *Equation (6.54)*

SOLUTION *Fig 6.22 (B)*

12 link spurs of 3B8 @ 270 — *36 links*

St (average) = 275 mm — Sr = 270 mm

Asw/Sr req = 2.231 *(6.52) & (9.11)*

Asw/Sr prov = 2.234 mm

First link perimeter 190 mm from column face

Outer links at 730 mm from column face

Uout = 8926 mm > 7,161 mm

See GEOMETRY page for link locations.

Some links shown may need to be re-located to avoid holes.

SPUR PLAN

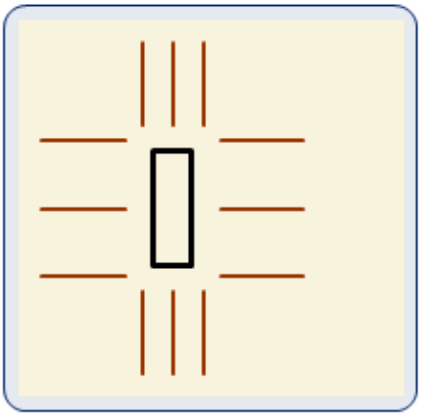

Column 4

Project	4- First Floor Columns Punching	The Concrete Centre	
Client	Advisory Group	Made by: KL	Date: 05-May-2015	Page:
Location	C3-01		
	PUNCHING SHEAR to BS EN 1992-1: 2004 — INTERNAL	Checked:	Revision: -	Job No: A12713
	Originated from TCC13.xlsm v4.9 on CD © 2003-15 TCC — COLUMN		

MATERIALS

f_{ck}	N/mm²	40	
f_{yk}	N/mm²	500	
Steel class		B	

STATUS

VALID DESIGN

LEGEND

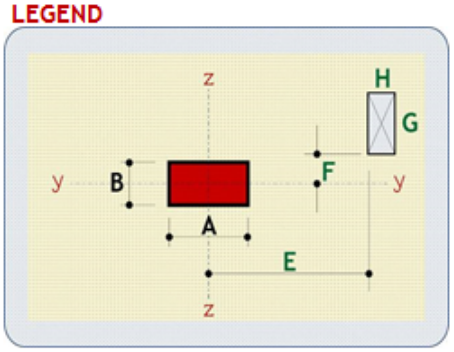

DIMENSIONS

A	mm	350	E	mm	0
B	mm	350	F	mm	0
G	mm	0	H	mm	0

LOADING

V_{Ed}	kN	1100	
ult UDL	kN/m²	0.00	
ß =	1.150	braced structure, adjacent spans d	

SLAB

h	mm	450	dz	mm	395.5	Asz	mm²/m	1010	in B + 6d	ρx = 0.255
			dy	mm	376.5	Asy	mm²/m	1010	in A + 6d	ρy = 0.268
			d	mm	386				100ρL % =	0.262

RESULTS

βV_{Ed} =	1265.0	kN	$v_{Rd,c}$ =	0.4993	N/mm²	*Equation (6.47)*
At col. face, vEd =	2.341	N/mm²	At 2d perimeter, $v_{Ed,red}$ =	0.5243	N/mm²	
			Uout required =	6564	(≈ See Fig 6.22B)	*Equation (6.54)*

SOLUTION *Fig 6.22 (B)*

12 link spurs of 3B8 @ 285 — *36 links*

St (average) =	250	mm	Sr =	285	mm
Asw/Sr req =	1.802		*(6.52) & (9.11)*		
Asw/Sr prov =	2.116	mm			
First link perimeter	190	mm from column face			
Outer links at	760	mm from column face			
Uout =	8726	mm > 6,564 mm			

SPUR PLAN

See GEOMETRY page for link locations.

Some links shown may need to be re-located to avoid holes.

Column 5

Project	4- First Floor Columns Punching	The Concrete Centre	
Client	Advisory Group	Made by: KL	Date: 05-May-2015	Page:
Location	C3-01	Checked:	Revision: -	Job No: A12713
	PUNCHING SHEAR to BS EN 1992-1: 2004	INTERNAL		
	Originated from TCC13.xlsm v4.9 on CD © 2003-15 TCC	COLUMN		

MATERIALS

f_{ck}	N/mm²	40	
f_{yk}	N/mm²	500	
Steel class		B	

STATUS

VALID DESIGN

.

LEGEND

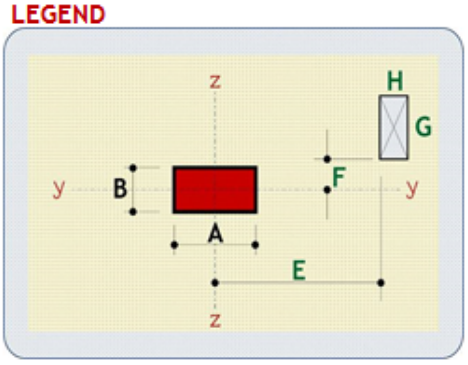

DIMENSIONS

A	mm	200	E	mm	0
B	mm	600	F	mm	0
G	mm	0	H	mm	0

LOADING

V_{Ed}	kN	600
ult UDL	kN/m²	0.00

ß = 1.150 braced structure, adjacent spans d

SLAB

			dz	mm	395.5	Asz	mm²/m	1010	in B + 6d	ρx = 0.255
h	mm	450	dy	mm	376.5	Asy	mm²/m	1010	in A + 6d	ρy = 0.268
			d	mm	386				100ρL % =	0.262

RESULTS

βV_{Ed} =	690.0	kN	$v_{Rd,c}$ =	0.4993	N/mm²	Equation (6.47)
At col. face, vEd =	1.117	N/mm²	At 2d perimeter, $v_{Ed,red}$ =	0.2771	N/mm²	
			Uout required =	1600	(≈ See Fig 6.22B)	Equation (6.54)

No links required

SPUR PLAN

Column 6

Project	4- First Floor Columns Punching	The Concrete Centre		
Client	Advisory Group	Made by: KL	Date: 05-May-2015	Page: 1
Location	Column B2			
	PUNCHING SHEAR to BS EN 1992-1: 2004 — EDGE COLUMN	Checked: 0	Revision: -	Job No: A12713
	Originated from TCC13.xlsm v4.9 on CD © 2003-15 TCC			

MATERIALS

fck	N/mm²	40	
fyk	N/mm²	500	
Steel class		B	

STATUS

VALID DESIGN

.

LEGEND

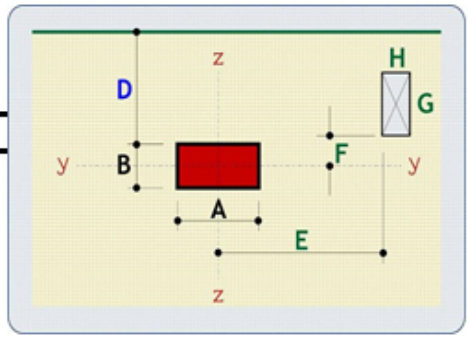

DIMENSIONS

A	mm	200	E	mm	-1000
B	mm	600	F	mm	-1000
			G	mm	0
D	mm	356	H	mm	0

LOADING

V_{Ed}	kN	1250	Mtz =	kNm	0.0
ult UDL	kN/m²	0.00			
`	1.186	to expression (6.44)			

SLAB

			dz	mm	395.5	Asz	mm²/m	1010	in B + 3d+D px = 0.255
h	mm	450	dy	mm	376.5	Asy	mm²/m	1010	in A + 6d py = 0.268
			d	mm	386				100ρL % = 0.262

RESULTS

βV_{Ed} = 1482.5 kN — $v_{Rd,c}$ = 0.4993 N/mm² *Equation (6.47)*

At col. face, vEd = 2.828 N/mm² — At 2d perimeter, $v_{Ed,red}$ = 0.8465 N/mm²

Uout required = 7693 (≈ 1,858 from col face) *Equation (6.54)*

SOLUTION *Fig 6.22 (A)*

9 link spurs of 6B12 @ 245 — *66 links*

plus 6 spurs of 2B12 @ 245

St = 246.9 mm — Sr = 245 mm

Asw/Sr req = 4.121 *(6.52) & (9.11)*

Asw/Sr prov = 4.155 mm

First link perimeter 190 mm from column face

Outer links at 1415 mm from column face

Uout = 8420 mm > 7,693 mm

See GEOMETRY page for link locations.

Some links shown may need to be re-located to avoid holes.

SPUR PLAN

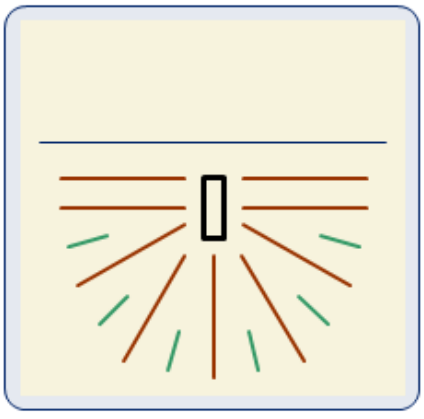

Column 7

Project	4- First Floor Columns Punching	The Concrete Centre		
Client	Advisory Group	Made by: KL	Date: 05-May-2015	Page: 1
Location	Column B2			
	PUNCHING SHEAR to BS EN 1992-1: 2004 — EDGE COLUMN	Checked: 0	Revision: -	Job No: A12713
	Originated from TCC13.xlsm v4.9 on CD © 2003-15 TCC			

MATERIALS

fck N/mm² 40
fyk N/mm² 500
Steel class B

STATUS

VALID DESIGN

LEGEND

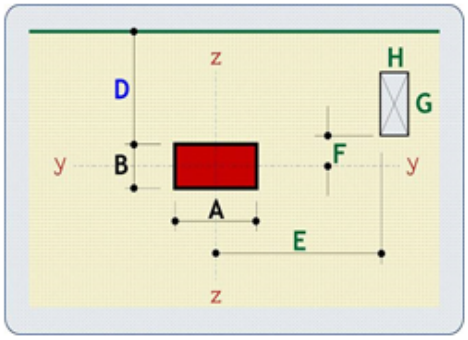

This is a wall

DIMENSIONS

A	mm	200	E	mm	-5000
B	mm	956	F	mm	-5000
			G	mm	0
D	mm	0	H	mm	0

LOADING

V_{Ed} kN 900 Mtz = kNm 0.0
ult UDL k 0.00
` 1.267 to expression (6.44)

SLAB

h mm 450

dz	mm	395.5	Asz	mm²/m	1010 in B + 3d+D px = 0.25
dy	mm	376.5	Asy	mm²/m	1010 in A + 6d py = 0.268
d	mm	386			100ρL % = 0.262

RESULTS

βV_{Ed} = 1140.2 kN
At col. face, vEd = 2.175 N/mm²

$v_{Rd,c}$ = 0.4993 N/mm² *Equation (6.47)*
At 2d perimeter, $v_{Ed,red}$ = 0.6510 N/mm²
Uout required = 5917 (≈ 1,267 from col face) *Equation (6.54)*

SOLUTION *Fig 6.22 (A)*

7 link spurs of 3B10 @ 225 *21 links*

St = 396.9 mm Sr = 225 mm
Asw/Sr req = 2.415 *(6.52) & (9.11)*
Asw/Sr prov = 2.443 mm
First link perimeter 190 mm from column face
Outer links at 640 mm from column face
Uout = 5963 mm > 5,917 mm

SPUR PLAN

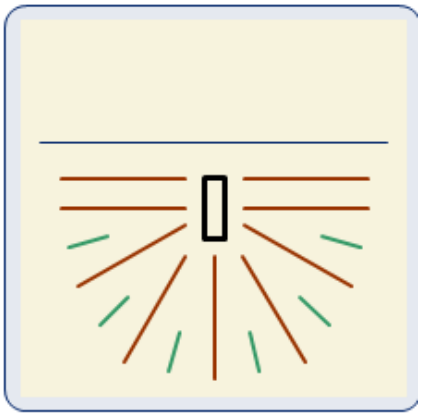

See GEOMETRY page for link locations.
Some links shown may need to be re-located to avoid holes.

Column 8

Project	4- First Floor Columns Punching	The Concrete Centre		
Client	Advisory Group	Made by: KL	Date: 05-May-2015	Page: 1
Location	Column B2			
	PUNCHING SHEAR to BS EN 1992-1: 2004 — EDGE COLUMN	Checked: 0	Revision: -	Job No: A12713
	Originated from TCC13.xlsm v4.9 on CD © 2003-15 TCC			

MATERIALS

fck N/mm² 40
fyk N/mm² 500
Steel class B

STATUS

VALID DESIGN

.

LEGEND

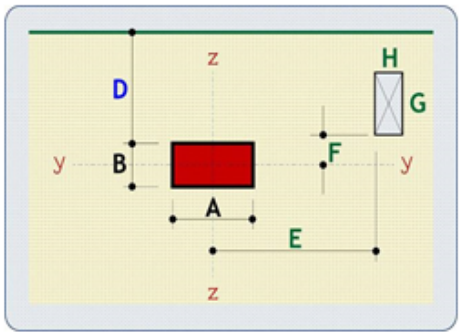

This is a wall

DIMENSIONS

A	mm	200	E	mm	-5000
B	mm	956	F	mm	-5000
			G	mm	0
D	mm	0	H	mm	0

LOADING

V_{Ed} kN 850 Mtz = kNm 0.0
ult UDL kN/m² 0.00
` 1.267 to expression (6.44)

SLAB

			dz	mm	395.5	Asz	mm²/m	1010	in B + 3d+D	px = 0.255
h	mm	450	dy	mm	376.5	Asy	mm²/m	1010	in A + 6d	py = 0.268
			d	mm	386				100ρL % =	0.262

RESULTS

βV_{Ed} = 1076.9 kN — $v_{Rd,c}$ = 0.4993 N/mm² *Equation (6.47)*

At col. face, vEd = 2.054 N/mm² — At 2d perimeter, $v_{Ed,red}$ = 0.6149 N/mm²

Uout required = 5588 (≈ See Fig 6.22B) *Equation (6.54)*

SOLUTION *Fig 6.22 (B)*

9 link spurs of 4B8 @ 215 *36 links*

.

St (average) = 388.3 mm Sr = 215 mm
Asw/Sr req = 2.099 *(6.52) & (9.11)*
Asw/Sr prov = 2.104 mm
First link perimeter 190 mm from column face
Outer links at 835 mm from column face
Uout = 5775 mm > 5,588 mm

SPUR PLAN

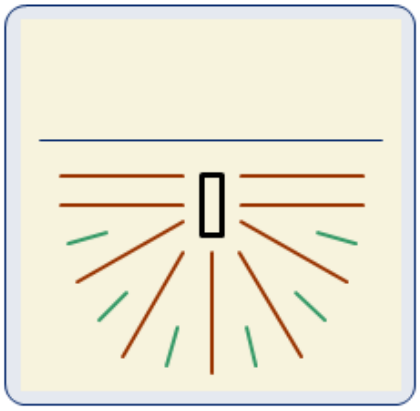

See GEOMETRY page for link locations.

Some links shown may need to be re-located to avoid holes.